Subject to technical modifications
保留不预先通知进行技术修改的权利

因为努力，所以我们专业。因为专业，所以我们可靠。
因为可靠，所以客户满意。因为满意，我 们铸就辉煌。
展望未来，上海水泵制造有限公司将秉承“**老品牌、新机制、高境界**”的发展理念，奋力开启创新发展的新篇章

Hard working makes us professional Being professional makes us reliable Being reliable makes customer satisfied Customer's satisfaction bring us future Pump manufacturing co.LTD. Looking forward to the future, shanghai will be adhering to the “old brand, new mechanism and high level” development concept, to open a new chapter of innovation.

SPZA、SPZAO系列石油化工流程泵

SPZA、SPZAO Series Chemical Process Pump

百年传承 泵业专家

Century inheritance Pump specialist

我们的承诺 Our Commitments

客户的利益 > 本公司的利益
Customers' Benefit > Our Benefit
客户的需求 = 本公司需求
Customers' Demand = Our Demand
客户的风险 < 本公司风险
Customers' Risk < Our Demand

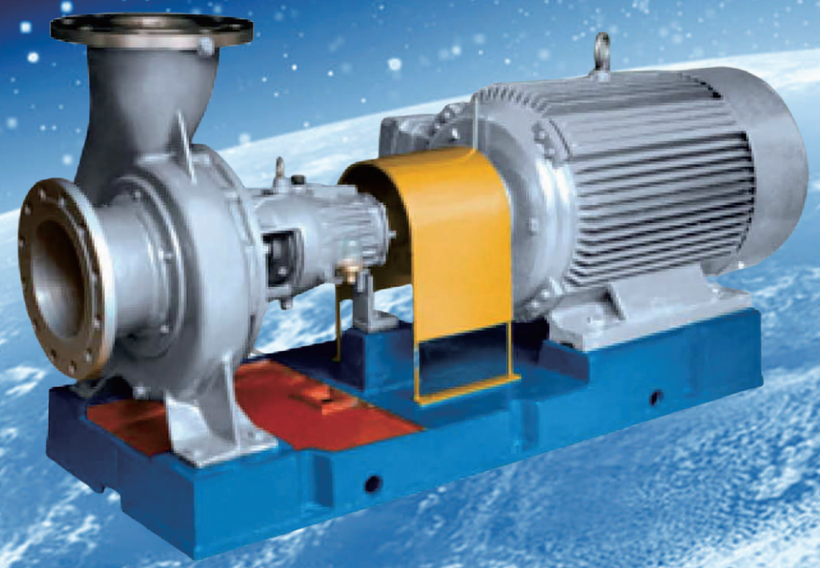

上海水泵制造有限公司
SHANGHAI PUMP MANUFACTURE CO., LTD
地址：上海市奉贤区青伟路500弄230号
Address:No.230,Lane500, Qingwei Road, Fengxian District,Shanghai
销售/服务热线Sales/service hotline: 18901621777
电 话Tel:86-21-37595000
E-mail:sales@spmc.cc
Website:www.spmc.cc

上海水泵制造有限公司
SHANGHAI PUMP MANUFACTURE CO., LTD

公司简介

上海水泵制造有限公司(SPMC)是领先的流体系统供应商，结合创新技术和优良服务，为用户提供一体化的解决方案。

上海水泵制造有限公司专业生产各类泵产品，是中国通用机械工业协会泵业分会副理事长单位、国家高新技术企业、上海市“专精特新”企业、产品获“上海名牌”称号，在各应用领域享有很高的声誉。

上海水泵制造有限公司为以下行业提供专业服务：能源、城市给排水和污水处理、工业、冶金、石油、化工、大型农田水利建设、楼宇、船舶工业等。包括泵系统相关设备调试、维修、升级改进、更换和技术咨询服务等。

上海水泵制造有限公司始终坚持“为客户创造更高价值”为宗旨，实施国际化品牌战略，着力提升产品的品质品位；依托不断创新的技术、先进的经营理念和高素质的员工队伍，为海内外用户提供安全、可靠、节能高效的泵类产品。

Company Profile

Shanghai Pump Manufacture Co., Ltd. (SPMC) is a leading supplier of Fluid Systems, who could combining innovative technology and excellent service to provide users with intelligent and integrated solutions.

SPMC specializing in the production of various types of pump products, and act as the vice-chairman unit of Pump Industry Branch of China General Machinery Industry Association, who has already become a national high-tech enterprise, also appraised as"New Special Expertise"enterprise in Shanghai, the products awarded as the title of "Shanghai Famous Brand". SPMC enjoys the very high prestige in various application fields.

SPMC provides professional services for many fields such as energy, urban water supply and drainage and sewage treatment, industrials, metallurgy, petroleum, chemical industry, large-scale irrigation and water conservancy construction, building, ship-building industry, and etc. And involves pump system related equipment installation, commissioning, maintenance, upgrading, improvement, replacement and technical consulting services, and etc.

SPMC always adhere the purpose for creating better value for customers, and implement international brand strategy, focus on improving the quality grade of the products. By continuous innovation of technology, advanced business philosophy and great teamwork to service for domestic and overseas users with secure, reliable, energy-saving and efficient pump products.

上海水泵制造有限公司
SHANGHAI PUMP MANUFACTURE CO.LTD
SPZA/ZAO型

公司资质/Qualification

- 营业执照Business license
- 高新技术企业证书 Shanghai University Doctoral Practice Base
- 中国通用机械工业协会泵业分会副理事长单位
  Vice President Unit of Pump Page Branch of China General Machinery Industry Association

SPZA、SPZAO石油化工流程泵，是根据API610(第八版)和VDMA24297(轻/中型)规范设计的。

■ 应用范围

本泵适合输送清洁或含有颗粒的液体，低温或高温的液体，中性或有腐蚀性的液体。

■ 主要用途

- 炼油厂、石油化学工业、煤加工工业和低温工程。
- 化学工业、造纸、纸浆业、制糖业和普通流程工业。
- 供水厂、海水淡化厂
- 供暖和空气调节系统
- 发电厂
- 环境保护工程
- 船舶及海上工业等。

■ 结构

该泵为单级、卧式径向剖分蜗壳泵，泵体为脚支撑,单吸径向叶轮,轴向吸入，径向排出。
根据使用条件，采用前、后磨损环及平衡孔进行水力平衡。填料箱具有冷却或加热管接头。轴封采用填料密封，也可以采用单端面或双端面机械密封。并配有冷却，冲洗或密封系统。
・标准管路按API规范设计。
・吸入及排出管法兰的额定压力等级相同。
・从电机端看，泵为顺时针转动。

■ 输送介质

各种温度和浓度的硫酸、硝酸、盐酸和磷酸等无机酸和有机酸。各种盐溶液。
各种液态石油化工产品，有机化合物，以及其它有腐蚀性的原料和产品。
目前我厂的耐腐蚀材料，能满足上述各种介质的要求。订货时，请用户提供所要输送介质的详细情况。

■ 使用参数/Operating data

口径/Size	25-400mm
流量(Q) 可达/Capacities Qup to	2600m³/h
扬程(H) 可达/Heads Hup to	250m
工作压力(P) 可达/Pressures pup to	2.5MPa
工作温度(T)/Temperaturet-	20°C~+180°C
中心支撑/Centerline support-	20°C~+450°C

Model-SPZA、SPZAO series petrochemical process pumps is designed according to API610(8th edition)and VDMA 24297 (light/medium duty)

■ Application ranges

For pumping clean or slightly polluted,cold or hot,chemically neutra or aggressive liquids.

■ Mainly usage

- In refineries,petrochemical industry,coal processing and low temperature engineering.
- In chemical industry,fibre and general processing industries,particularly in paper and pulp industries,sugar industry.
- In water industry,particularly seawater desalination plants. In heating and air-condition ing.
- In fossile and nuclear power-stations.
- Condition protective project.
- In ship and offshore industries.

■ Structure

Single-stage,horizontal,radially split volute casing pumps with feet below and single-entry radial impeller, and suction branch,radially upwards discharge branch.
Depending on operating conditions hydraulic balance is provided by front or rear wear rings and balance holes. Casing cover with cooling or heating connections,shaft sealing by packings or mechanical seals of any design (single or double working),connections for cooling,flushing or sealing liquid.
・Standardized pipework s designed according to API plans.
・Cooling of baseplate pedestal possible.Flanges possible according to DIN or ANSI.Same nominal pre-ssure for suction and discharge flanges.
・Direction of rotation clockwise seen from drive end.

■ Pumping Medium

Sulphric acd,nitric acid,hydrochloric acid;phos-phoric acid for organic acid and inorganic acid which at various temperature and concentration.
Allkinds of salt soluction.
Sodium hydroxide,sodium carbonate and alkaline liquid at various temperature and concentration.
Various liquid petrochemical,organic compound as well as raw materials with corrosion and products.
At present,anti-corrosive materials,for pumps provided by our plant can meet all the requirements of the medium mentioned above.
Please provide the detail service conditions for the pump to use,when you order.

上海水泵制造有限公司
SHANGHAI PUMP MANUFACTURE CO.LTD
SPZA/ZAO型

■ 设计特点

设计特点	优 点	经济效益
• 按照API610(第八版)标准设计 • 采用组件装配，联轴器带有加长段	• 保证执行流程工业的结构和维修标准 • 拆装泵时无须拆下管道和电机，易于拆装，便于维修	• 可靠性高 • 互换性好 • 停工时间短 • 维修费用低
不同规格泵的基本部件可以互换	46种规格泵只需8种规格的轴承部件，对于重工位的HZE、HZF、HZU型泵具有相同的水力部件(叶轮)和轴承部件	• 备件少 • 易保管 • 费用低
• 双蜗壳泵体(口径80mm以上) • 管径大，腐蚀余量大	• 径向力小，轴挠度小，轴封处挠度小于0.05mm • 管内流速小，振动小，噪音低。泵体带有自动排气装置。管道结构简单,承载力好。泵体无须支架,不会断裂,寿命长	• 轴套和耐磨轴承使用寿命长 • 维修方便，费用低 • 效率高 • 能耗少 • 管道支撑和消音附件费用低备件少，稳定性高
• 叶轮结构 • 闭式叶轮(标准件) • 开式叶轮(ZAO)型 • 叶轮用钢丝螺套自锁	• 闭式叶轮，对工况适应性强，效率高，汽蚀余量低 • 开式叶轮,适于输送汽液两相流和含固体颗粒浓度大(达10%)的液体 • 汽蚀量极低，要求装置汽蚀余量小 • 轴不与输送介质接触	本系列泵，结构合理，便于维修，能耗低，稳定可靠，价格便宜
磨损件可以更换 叶轮和泵体磨损环(角结构也可),轴封处轴套，泵体磨损环可以冲洗	当泵体、叶轮上的磨损环和轴套磨损后，更换之，泵体、叶轮和轴仍可以继续使用	节省维修和备件费用维修简便迅速
• 整体重型轴承支架 • 油润滑球轴承，自动润滑而且自动控制油位 • 当温度T≤250°C时，无须冷却 • 当温度T>250°C时，用风冷或水冷却 • 迷宫环密封(标准件),也可以用径向密封环	• 轴承支架同轴度好，稳定性高，刚性好，挠度小。nk>nop零件少 • 轴承拆检次数少 • 不增加轴承温度	• 填料密封或机械密封寿命长易于维修，停工时间短 • 运行费用低，不需对冷却系统投资
填料箱尺寸适宜	填料密封和各种结构的机械密封可互换	互换性好，改型时填料箱不必另行加工

Design Features-Advantages-Economic Considerations

Design features	Advantages	Economic considerations
Process design API610 (8th edition) Assembly unit Coupling with spacer	Design and maintenance standard compl- ying with process industry is ensured Rapid disassembly or assembly Disassembly without removal of pipework and driver	High reliability and interchangeability Shortshut-downs Low maintenance costs
Interchangeable modular elements for varlous slzes	Only 8 bearing frames for 46 sizes.Same hydraulics(impeller)and bearing frames as for heavy duty serles HZE,HZEF and HZU.	Few components,economic spare part stockkeeping,low stockkeeplng costs
Double volute casing (above 80mm size) Large suction and discharge branches Increased corrosion allowanceMetallic seat	Small radial thrust,small shaft Deflection(<0.05mm)in the area of the shaftseal Low branch velocity,low noise level due to additional primary measures at impealler, pipework design,better absorption of force, long rated life of cas- ings,casing joint cannot break and casing parts cannot brace	Long rated life of antifriction bearings, long rated life shart seals,short shut- downs,low maintenance costs higher efficiency,low operating costs,low costs for pipework support and sound protection. low spare part and repair costs,high raliability
Impeller Closed impeller(standard) Open impeller depending on sizes (ZAO) impeller fastening with automatically controlled threaded insert	Optimum compliance with various operating conditions,closed impeller with high efficiencies, low NPSH req values Open impeller for very gaseous liquids, high solids concontrations(up to10%atro) Extremely low NPSHrwq,Values. Small suction heads required Shaft completely protected from Liquid pumped (dry shaft)	High reliability of pumps,lowmaintenance periods, low energy costs due to carefui pump selection Small investment costs for plants Corrosion and wear protectionEasy assembly/disassembly
Interchangeable wear parts Impeller and casing wear rings (angular design possible) Shaft sleeve in the area of the shaft seal Casing wear rings can be washed	When casing and impeller wear rings and shaft seal are subject to wear,casing im- peller and shaft can be reused	Considerable saving of repair and spare part stockkeeping costs,short repair pe- riods
One-piece heavy duty bearing bracket Oil-lubricated antifriction bearings,with automatic lubrication and oll lever control t<250°C,no cooling I>250°C,air cooling (fan)(water cooling possible) With labyrinth sealing (standard) (radial sealing ring possible)	Stable,aligning shaft position,robust shaft with small shaft deflection,nk>nopera- tion,few components few bearing checks required no cooling water pipework no cooling water consumption no increased bearing heating,wear-re- sistant bearing sealing	Long rated life of packings or mechanical seals Easy maintenance Short shut-downs Low operating costs No investment costs for cooling system
Well dimensioned stuffing box housing	Possibility of replacing packings or me- chanical seals of any design	High interchangeability,low modification costs (no machining of stuffing boxhousing)

SPZA性能范围/SPZA Performance Range

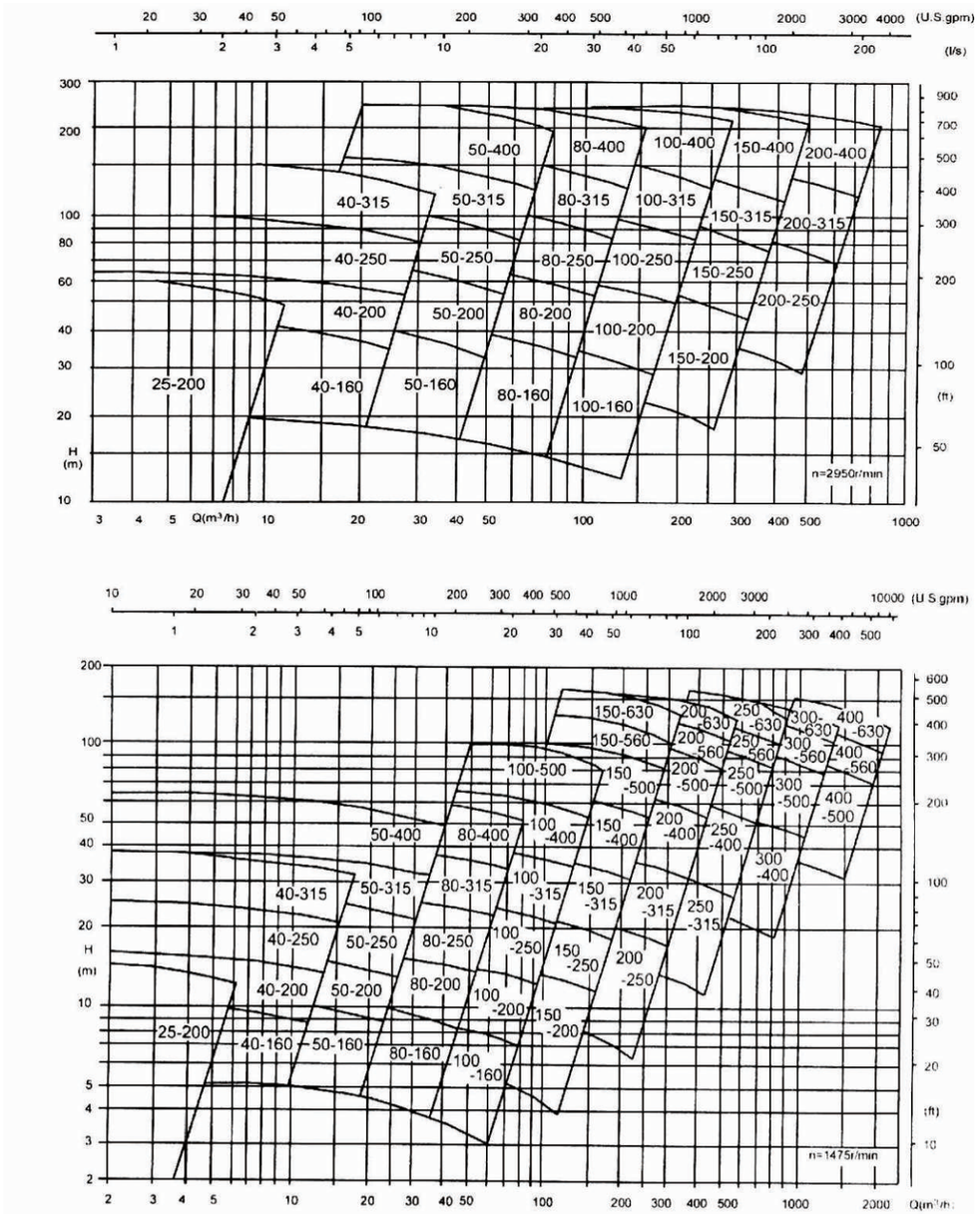

图1 50HZ
Fig 1 50HZ

■ SPZA/ZAO性能范围/SPZA/ZAO Performance Range

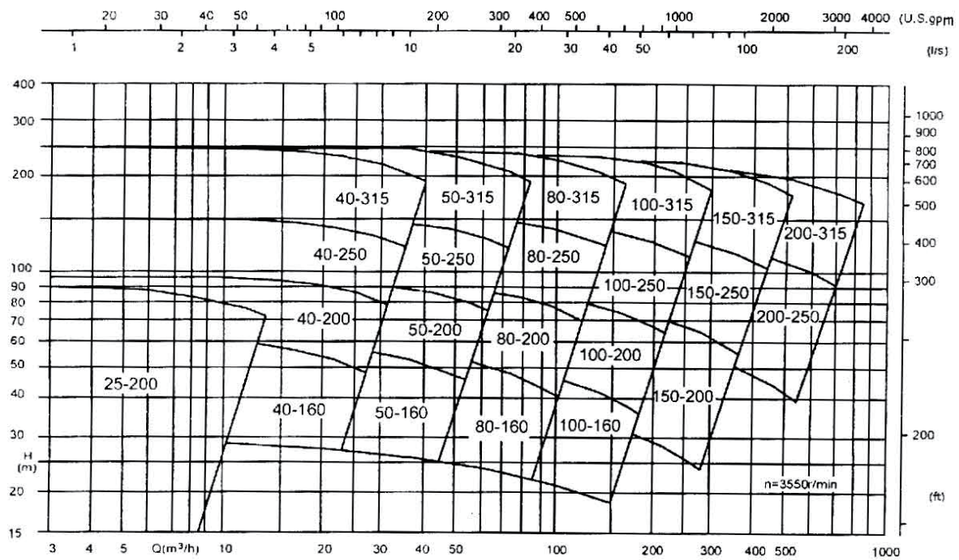

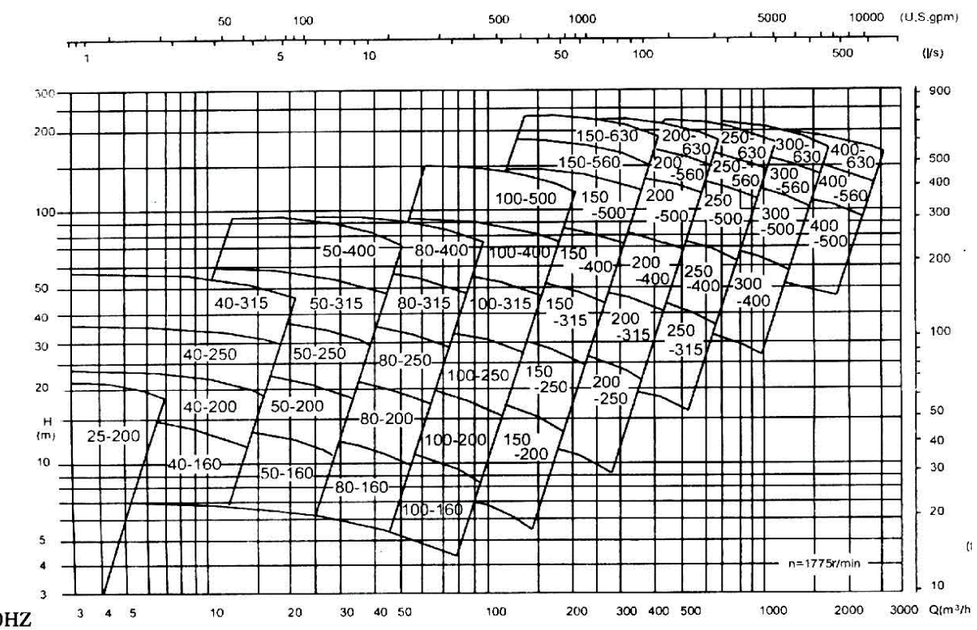

60HZ

60HZ

■ SPZAO性能范围/SPZAO Performance Range

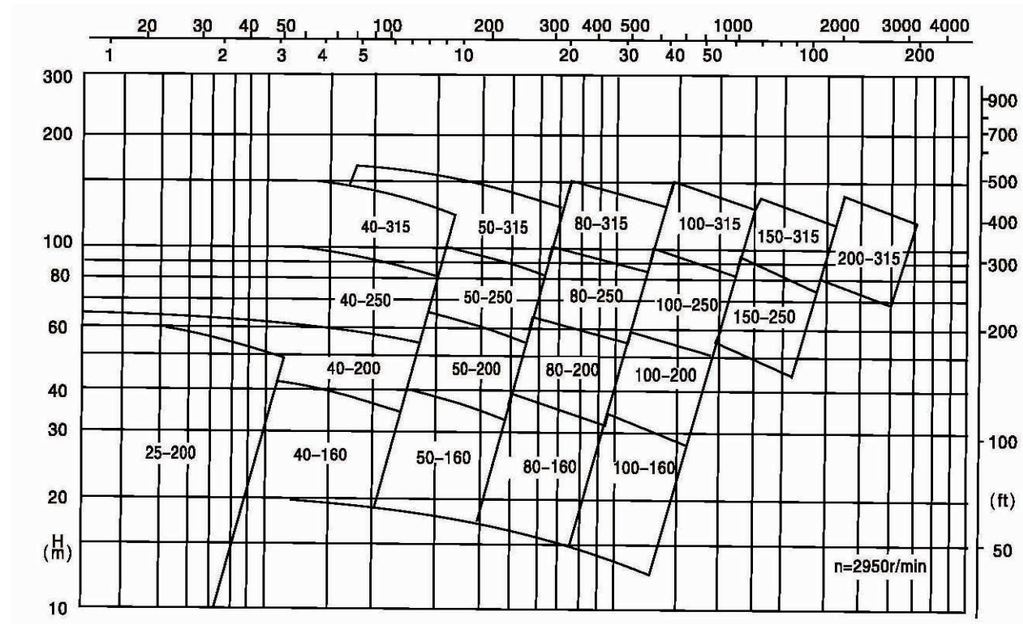

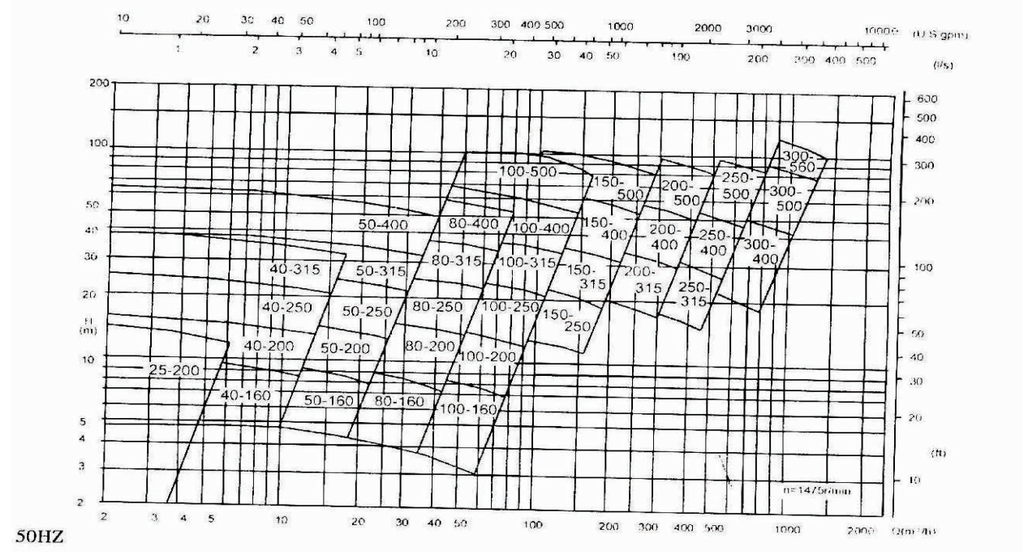

50HZ

50HZ

■ SPZA□ZAO型性能表 Table of Standard PerformAnce

型号 Model	叶轮型式	泵额定转速n=2900r/min Speed												泵额定转速n=1450r/min Speed											
		流量Q m³/h	扬程H m	效率η %	轴承架LK	汽蚀余量NPSHm	比重γ=1.00		比重γ=1.35		比重γ=1.84			流量Q m³/h	扬程H m	效率η %	轴承架LK	汽蚀余量NPSHm	比重γ=1.00		比重γ=1.35		比重γ=1.84		
							电机功率及型号 Motor												电机功率及型号 Motor						
							kw		kw		kw								kw		kw		kw		
SPZA25-200 SPZAO25-200	A	11.5	49	42	0	1.5	5.5	Y132S₁-2	7.5	Y132S₂-2	11	Y160M₁-2		5.8	12	38	0	0.6	1.1	Y90S-4	1.1	Y90S-4	1.5	Y90S-4	
	B	10.5	42				4	Y112M-2	5.5	Y132S₁-2	7.5	Y132S₂-2		5.4	11								1.1	Y90S-4	
	C	9	36				3	Y100L-2	4	Y112M-2	5.5	Y132S₁-2		4.6	8.5										
	D	7.5	28				2.2	Y90L-2	3	Y100L-2	4	Y112M-2		4	6.5										
	E	5.5	16				1.5	Y90S-2	1.5	Y90S-2	2.2	Y90L-2		3	4										
SPZA25-250 SPZAO25-250	A	10.5	80	28	2	1.2	11	Y160M₁-2	15	Y160M₁-2	18.5	Y160L-2		7.5	18	23	1	1	2.2	Y100L₁-4	3.0	Y100L₁-4	4	Y112M-4	
	B	9.7	68				7.5	Y132S₁-2	11	Y160M₁-2	15	Y160M₁-2		7	16				2.2	Y100L₁-4	3.0	Y100L₁-4	4	Y112M-4	
	C	9	50				5.5	Y132S₁-2	11	Y160M₁-2	15	Y160M₁-2		6.5	11.5				2.2	Y100L₁-4	2.2	Y100L₁4	3	Y100L₁-4	
	D	8.5	30											6	6.5				1.1	Y90S-4	1.5	Y90L-4	2.2	Y100L₁-4	
	E						4	Y112M-2	5.5	Y132S₁-2	7.5	Y132S₂-2													
SPZA25-315 SPZAO25-315	A	18.5	130	28	2	1.2	30	Y200L₁-2	45	Y225M-2	55	Y250M-2		9.5	32	25	2	0.7	5.5	Y132S-4	7.5	Y132M-4	11	Y160M-4	
	B	17.5	115				30	Y200L₁-2	37	Y200L₂-2	45	Y225M-2		8.7	29				4.0	Y112M-4	5.5	Y132S-4	7.5	Y132M-4	
	C	16	100				22	Y180M-2	30	Y200L₁-2	45	Y225M-2		7.5	25				3.0	Y100L₁-4	4.0	Y112M-4	5.5	Y132S-4	
	D	14	90				18.5	Y160L-2	30	Y200L₁-2	37	Y200L₂-2		7	22				3.0	Y100L₁-4	4.0	Y112M-4	5.5	Y132S-4	
	E	13	80				18.5	Y160L-2	22	Y180M-2	30	Y200L₁-2		6.8	20				3.0	Y100L₁-4	4.0	Y112M-4	5.5	Y132S-4	
	F	11.5	67				15	Y160M₁-2	18.5	Y160L-2	30	Y200L₁-2		6	16				2.2	Y100L₁-4	3.0	Y100L₁-4	4.0	Y112M-4	
SPZA40-160 SPZAO40-160	A	28	33	62	2	3	5.5	Y132S₁-2	7.5	Y132S₂-2	11	Y160M₁-2		14	8	59	1	0.8	1.1	Y90S-4	1.1	Y90S-4	1.5	Y90L-4	
	B	25.6	29											13	7										
	C	22	22				4	Y112M-2	5.5	Y132S₁-2	5.5	Y132S₂-2		11	5.5								1.1	Y90S-4	
	D	20	16				2.2	Y90L-2	3	Y100L-2	4	Y112M-2		9.5	4.5										
SPZA40-200 SPZAO40-200	A	29	53	58	1	2.2	11	Y160M₁-2	15	Y160M₁-2	18.5	Y160L-2		14.5	13	55	1	0.8	1.5	Y90L-2	2.2	Y100L₁-4	3	Y100L₁-4	
	B	26	47				7.5	Y132S₁-2	11	Y160M₁-2	15	Y160M₁-2		13	11.5				1.1	Y90S-4	1.5	Y90L-4	3	Y100L₁-4	
	C	22	39				5.5	Y132S₁-2	7.5	Y132S₂-2	11	Y160M₁-2		11.5	9						1.1	Y90S-4	1.5	Y90L-4	
	D	18	20				4	Y112M-2	5.5	Y132S₁-2	7.5	Y132S₂-2		9.5	7				1.1	Y90S-4			1.1	Y90S-4	
SPZA40-250 SPZAO40-250	A	32	78	53	1	2.5	18.5	Y160L-2	22	Y180M-2	30	Y200L₁-2		16	19.5	49.5	1	0.8	3	Y100L₁-4	4	Y112M-4	5.5	Y132S-4	
	B	30	72				15	Y160M₁-2	18.5	Y160L-2				15	18				2.2	Y100L₁-4	3	Y100L₁-4	4	Y112M-4	
	C	24	60				11	Y160M₁-2	15	Y160M₁-2	18.5	Y160L-2		12.5	14				1.5	Y90L-4	2.2	Y100L₁-4	3	Y100L₁-4	
	D	21	47				7.5	Y132S₁-2	11	Y160M₁-2	15	Y160M₁-2		10.5	1				1.1	Y90S-4	1.5	Y90L-4	2.2	Y100L₁-4	
SPZA40-315 SPZAO40-315	A	42	115	46	2	1.3	37	Y200L₁-2	45	Y225M-2	75	Y280S-2		21	29	42	2	0.5	5.5	Y132S-4	7.5	Y132M-4	11	Y160M-4	
	B	40	107				30	Y200L₁-2			55	Y250M-2		20	26.5										
	C	34	81				22	Y180M-2	30	Y200L₁-2	45	Y225M-2		17.5	20				4	Y112M-4	5.5	Y132S-4	7.5	Y132M-4	
	D	29	61				15	Y160M₁-2	22	Y180M-2	30	Y200L₁-2		15	15				3	Y100L₁-4	3	Y100L₁-4	5.5	Y132M-4	
SPZA50-160 SPZAO50-160	A	50	34	71	2	2.4	11	Y160M₁-2	15	Y160M₁-2	15	Y160M₁-2		25	8.4	69	1	0.8	1.5	Y90L-4	2.2	Y100L₁-4	2.2	Y100L₁-4	
	B	45	29				7.5	Y132S₁-2	11	Y160M₁-2				22.5	7						1.5	Y90L-4			
	C	38	22				5.5	Y132S₁-2	7.5	Y132S₂-2	11	Y160M₁-2		19	5.5				1.1	Y90S-4	1.1	Y90S-4	1.5	Y90L-4	
	D	31	17				3	Y100L-2	4	Y112M-2	5.5	Y132S₁-2		16.5	4								1.1	Y90S-4	
SPZA50-200 SPZAO50-200	A	62	52	68	2	2.6	18.5	Y160L-2	22	Y180M-2	30	Y200L₁-2		31	13	65.5	1	0.7	3	Y100L₁-4	3	Y100L₁-4	4	Y112M-4	
	B	56	46				15	Y160M₁-2	18.6	Y160L-2	22	Y180M-2		28.5	11.5				2.2	Y100L₁-4					
	C	49	37				11	Y160M₁-2	15	Y160M₁-2	18.5	Y160L-2		25	9				1.5	Y90L-4	2.2	Y100L₁-4	3	Y100L₁-4	
	D	43	28				7.5	Y132S₁-2	11	Y160M₁-2	15	Y160M₁-2		22	7				1.1	Y90S-4	1.5	Y90L-4	2.2	Y100L₁-4	
SPZA50-250 SPZAO50-250	A	70	82	65	2	2.4	30	Y200L₁-2	37	Y200L₂-2	55	Y250M-2		35	20	62.5	2	0.7	4	Y112M-4	5.5	Y132S-4	7.5	Y132M—4	
	B	66	75								45	Y225M-2		33	18.5										
	C	60	60				22	Y180M-2	30	Y200L₁-2	37	Y200L₂-2		30	15				3	Y100L₁-4	4	Y112M-4	5.5	Y132S-4	
	D	50	45				15	Y160M₁-2	18.5	Y160L-2	22	Y180M-2		26	11				2.2	Y100L₁-4	3	Y100L₁-4	3	Y100L₁-4	
SPZA50-315 SPZAO50-315	A	87	115	56	3	2.1	55	Y250M-2	75	Y280S-2	110	Y315S-2		44	28	53	2	0.5	11	Y160M-4	11	Y160M-4	15	Y160L-4	
	B	80	100				45	Y225M-2			90	Y280M-2		40	24				7.5	Y132M-4					
	C	70	78				30	Y200L₁-2	45	Y225M-2	55	Y250M-2		35	19				5.5	Y132S-4	7.5	Y132M-4	11	Y160M-4	
	D	57	57				22	Y180M-2	30	Y200L₁-2	37	Y200L₂-2		30	14				3	Y100L₁-4	4	Y112M-4	5.5	Y132S-4	
SPZA50-400 SPZAO50-400	A	82	194	48	3	2	110	Y315S-2	160	Y315M₁-2				41	48	45	2	0.5	15	Y160L-4	22	Y180L-4	30	Y200L-4	
	B	78	176				90	Y280M-2	132	Y315M₁-2	160	Y315M₂-2		39	43						18.5	Y180M-4	22	Y160L-4	
	C	70	140				75	Y280S-2	90	Y280M-2	132	Y315M₁-2		35	34				11	Y160M-4	15	Y160L-4	18.5	Y180M-4	
	D	60	102				45	Y225M-2	75	Y280S-2	90	Y280M-2		30	25				7.5	Y132M-4	11	Y160M-4	15	Y160L-4	

上海水泵制造有限公司
SHANGHAI PUMP MANUFACTURE CO.LTD
SPZA/ZAO型

■ SPZA□ZAO型性能表 Table of Standard PerformAnce

型号 Model	叶轮型式	泵额定转速n=2900r/min Speed												泵额定转速n=1450r/min Speed											
		流量Q m³/h	扬程H m	效率η %	轴承架LK	汽蚀余量NPSHm	比重γ=1.00		比重γ=1.35		比重γ=1.84			流量Q m³/h	扬程H m	效率η %	轴承架LK	汽蚀余量NPSHm	比重γ=1.00		比重γ=1.35		比重γ=1.84		
							电机功率及型号 Motor												电机功率及型号 Motor						
							kw		kw		kw								kw		kw		kw		
SPZA80-160 SPZAO80-160	A	94	32	78	2	3	15	Y160M₁-2	18.5	Y160L-2	30	Y200L₁-2		47	8	76	2	0.8	2.2	Y100L₁-4	3	Y100L₁-4	4	Y112M-4	
	B	85	28				11	Y160M₁-2	15	Y160M₁-2	18.5	Y160L-2		42	7				2.2	Y100L₁-4			3	Y100L₁-4	
	C	76	23						11	Y160M₁-2	15	Y160M₁-2		38	5.5								2.2	Y100L₁-4	
	D	66	17				5.5	Y132S₁-2	7.5	Y132S₂-2	11	Y160M₁-2		34	4				1.1	Y90S-4	1.1	Y90S-4	1.5	Y90L-4	
SPZA80-200 SPZAO80-200	A	103	54	76	1	3.2	30	Y200L₁-2	37	Y200L₁-2				51	13.5	74	1	0.8	4	Y112M-4	5.5	Y132S-4	7.5	Y132M-4	
	B	95	48				22	Y180M-2	30	Y200L₁-2	37	Y200L₁-2		47	12				3	Y100L₁-4	4	Y112M-4	5.5	Y132S-4	
	C	84	38				15	Y160M₁-2	22	Y180M-2	30	Y200L₁-2		41	9.5				2.2	Y100L₁-4	3	Y100L₁-4	4	Y112M-4	
	D	70	30				11	Y160M₁-2	15	Y180M₁-2	22	Y180M-2		36	7.5				1.5	Y90L-4	2.2	Y100L₁-4	3	Y100L₁-4	
SPZA80-250 SPZAO80-250	A	127	82	74	2	3.5	45	Y225M-2	75	Y280S-2	90	Y280M-2		64	20	74	2	1.4	7.5	Y132M-4	11	Y160M-4	15	Y160L-4	
	B	120	76						55	Y250M-2	75	Y280S-2		60	19						7.5	Y132M-4	11	Y160M-4	
	C	105	59				30	Y200L₁-2	45	Y225M-2	55	Y250M-2		52	14.5				4	Y112M-4	5.5	Y132S-4	7.5	Y132M-4	
	D	87	45				22	Y180M-2	30	Y200L₁-2	37	Y200L₁-2		46	11				3	Y100L₁-4	4	Y112M-4	5.5	Y132S-4	
SPZA80-315 SPZAO80-315	A	141	127	69	2	4	90	Y280M-2						70	33	69	2	1	15	Y160L-4	18.5	Y10M-4	22	Y180L-4	
	B	135	121				75	Y280S-2						66	30				11	Y160M-4	15	Y160L-4			
	C	115	97				55	Y250M-2	75	Y280S-2				56	24						11	Y160M-4	15	Y160L-4	
	D	90	74				37	Y200L₁-2	45	Y225M-2	75	Y280S-2		45	18				5.5	Y132S-4	7.5	Y132M-4	11	Y160M-4	
SPZA80-400 SPZAO80-400	A	171	187	61	3	3.5	160	Y315M₁-2						85	48	61	2	0.8	22	Y180L-4	30	Y200L-4	45	Y225M-4	
	B	159	170											80	42				18.5	Y180M-4			37	Y225S-4	
	C	135	130				90	Y280M-2	132	Y315M₁-2				65	33				15	Y160L-4	18.5	Y160M-4	30	Y200L-4	
	D	116	95				75	Y280S-2	90	Y280M-2	132	Y315M₁-2		53	25				11	Y160M-4	15	Y160L-4	18.5	Y180M-4	
SPZA100-160 SPZAO100-160	A	162	29	81	2	4.7	22	Y180M-2	30	Y200L₁-2	37	Y200L₁-2		81	7.2	81	2	1.4	3	Y100L₁-4	4	Y112M-4	5.5	Y132S-4	
	B	150	24				15	Y160M₁-2	22	Y180M-2	30	Y200L₁-2		73	6				2.2	Y100L₁-4	3	Y100L₁-4	4	Y112M-4	
	C	130	17				11	Y160M₁-2	15	Y160M₁-2	18.5	Y160L-2		63	4.3				1.5	Y90L-4	2.2	Y100L₁-4	3	Y100L₁4	
	D	110	12				7.5	Y132S₁-2	11	Y160M₁-2	15	Y160M₁-2		55	3				1.1	Y90S-4	1.5	Y90L-4	2.2	Y100L₁-4	
SPZA100-200 SPZAO100-200	A	193	50	81	2	3.7	45	Y225M-2	55	Y250M-2	75	Y280S-2		95	12.5	81	2	1	5.5	Y132S-4	7.5	Y132M-4	11	Y160M-4	
	B	180	44				37	Y200L₁-2	45	Y225M-2				90	10.5										
	C	155	35				30	Y200L₁-2	37	Y200L₁-2	45	Y225M-2		80	8.5				4	Y112M-4	5.5	Y132S-4	7.5	Y132M-4	
	D	135	26				18.5	Y160L-2	30	Y200L₁-2	37	Y200L₁-2		70	6				3	Y100L₁-4	3	Y100L₁-4	4	Y112M-4	
SPZA100-250 SPZAO100-250	A	230	79	81	2	4	75	Y280S-2	90	Y280M-2				115	20	81	2	1	11	Y160M-4	15	Y160L-4	18.5	Y180M-4	
	B	218	73											110	18						11	Y160M-4	15	Y160L-4	
	C	190	58				45	Y225M-2	75	Y280S-2	90	Y280M-2		100	14				7.5	Y132M-4			11	Y160M-4	
	D	170	44				37	Y200L₁-2	45	Y225M-2	75	Y280S-2		90	40				5.5	Y132S-4	7.5	Y132M-4	7.5	Y132M-4	
SPZA100-315 SPZAO100-315	A	250	126	78	2	5	132	Y315M₁-2						125	31	78	2	1.4	18.5	Y180M-4	30	Y200L-4	37	Y225S-4	
	B	240	120						160	Y315M₁-2				110	29						22	Y180L-4	30	Y200L-4	
	C	203	97				90	Y280M-2	132	Y315M₁-2	160	Y315M₁-2		104	24				15	Y160L-4	18.5	Y180M-4	22	Y180L-4	
	D	170	71				75	Y280S-2	75	Y280S-2	110	Y315S-2		86	17.5				11	Y160M-4	11	Y160M-4	15	Y160L-4	
SPZA100-400 SPZAO100-400	A	300	194	74.5	3	6.4								150	48	74.5	3	1.7	37	Y225S-4	45	Y225M-4	75	Y280S-4	
	B	290	180											145	44				30	Y200L-4			55	Y250M-4	
	C	260	145											130	38				22	Y180L-4	30	Y200L-4	45	Y225M-4	
	D	224	105				110	Y315S-2	160	Y315M₁-2				115	28				15	Y160L-4	22	Y180L-4	30	Y200L-4	
SPZA100-500 SPZAO100-500	A													180	75		3	1.5	75	Y280S-4	90	Y280M-4	110	Y315S-4	
	B													187	68				55	Y250M-4	75	Y280S-4			
	C													142	53				37	Y225S-4	55	Y250M-4	75	Y280S-4	
	D													120	42				30	Y200L-4	37	Y225S-4	55	Y250M-4	
SPZA150-200 SPZAO150-200	A	320	44	83.5	2	6.4	55	Y250M-2	75	Y280S-2				160	11	83.5	2	1.7	7.5	Y132M-4	11	Y160M-4	15	Y160L-4	
	B	300	39				45	Y225M-2			90	Y280M-2		152	9.5										
	C	265	30				37	Y200L₁-2	45	Y225M-2	75	Y280S-2		140	7				5.5	Y132S-4	7.5	Y132M-4	11	Y160M-4	
	D	220	23				22	Y180M-2	30	Y200L₁-2	45	Y225M-2		123	5				3	Y100L₁4	4	Y112M-4	5.5	Y132S-4	
SPZA150-250 SPZAO150-250	A	390	74	82	3	6	110	Y315S-2	160	Y315M₁-2				195	18.5	82	2	1.4	15	Y160L-4	22	Y180L-4	30	Y200L-4	
	B	355	62				90	Y280M-2	110	Y315S-2	160	Y315M₁-2		180	6						10.5	Y180M-4	22	Y180L-4	
	C	325	46				75	Y280S-2	90	Y280M-2	110	Y315S-2		160	11.5				11	Y160M-4	11	Y160M-4	15	Y160L-4	
	D																								

■ SPZA□ZAO型性能表 Table of Standard PerformAnce

型号 Model	叶轮型式	泵额定转速n=2900r/min Speed												泵额定转速n=1450r/min Speed											
		流量Q m³/h	扬程H m	效率η %	轴承架LK	汽蚀余量NPSHm	比重γ=1.00		比重γ=1.35		比重γ=1.84			流量Q m³/h	扬程H m	效率η %	轴承架LK	汽蚀余量NPSHm	比重γ=1.00		比重γ=1.35		比重γ=1.84	
							电机功率及型号 Motor												电机功率及型号 Motor					
							kw		kw		kw								kw		kw		kw	
SPZA150-315	A	442	125	82.5	3	7								220	32.5	81	3	1.7	30	Y200L-4	45	Y225M-4	55	Y250M-4
	B	430	120											210	30						37	Y225S-4		
SPZAO150-350	C	372	94				160	Y315M₂-2						180	24				22	Y180L-4	30	Y200L-4	37	Y225S-4
	D	310	68				90	Y280M-2	132	Y315M₁-2	180	Y315M₂-2		150	17				15	Y160L-4	18.5	Y180M-4	22	Y180L-4
SPZA150-400	A	520	205	78.5	4	7								260	51	77	3	1.8	55	Y250M-4	75	Y280S-4	110	Y315S-4
	B	498	190											250	48								90	Y280M-4
SPZAO150-400	C	453	151											225	38				37	Y225S-4	55	Y250M-4	75	Y280S-4
	D	400	113											200	28				30	Y200L-4	37	Y225S-4	55	Y250M-4
SPZA150-500	A													300	77	74	3	2	110	Y315S-4	132	Y315M₁-4		
	B													283	72				90	Y280M-4	132	Y315M₁-4	160	Y315M₂-4
SPZAO150-500	C													233	59				75	Y280S-4	90	Y280M-4	110	Y315S-4
	D													208	45				45	Y225M-4	75	Y280S-4	75	Y280S-4
SPZA150-560	A													335	104	74.5	4	2.4	160	Y315M₂-4				
	B													315	97				132	Y315M₁-4				
SPZAO150-560	C													260	80				90	Y280M-4	132	Y315M₁-4	160	Y315M₂-4
	D													212	80				75	Y280S-4	90	Y280M-4	110	Y315S-4
SPZA150-530	A													360	115	63	4	2.4						
	B													338	105.5									
SPZAO150-630	C													274	82				132	Y315M₁-4	160	Y315M₂-4		
	D													220	80				75	Y280S-4	110	Y315S-4	180	Y315M₂-4
SPZA200-250	A	610	72	84.5	3	9	160	Y315M₂-2						305	17.5	83.5	3	2.4	22	Y180L-4	30	Y200L-4	45	Y225M-4
	B	580	65				160	Y315M₂-2						290	16				18.5	Y180M-4	30	Y200L-4	37	Y225S-4
SPZAO200-250	C	520	47				110	Y315S-2	132	Y315M₁-2	110	Y315S-2		260	12				15	Y160L-4	18.5	Y180M-4	30	Y200L-4
	D	470	32				75	Y280S-2	90	Y280M-2				240	8				11	Y160M-4	15	Y160L-4	15	Y160M-4
SPZA200-315	A	710	122	85.5	4	8.6								350	30	84.5	3	2	45	Y225M-4	55	Y250M-4	75	Y280S-4
	B	680	114											340	29				37	Y225S-4	55	Y250M-4	75	Y280S-4
SPZAO200-315	C	600	87											300	22				30	Y200L-4	37	Y225S-4	55	Y250M-4
	D	480	65				132	Y315M₂-2						250	15				18.5	Y180M-4	22	Y180L-4	30	Y200L-4
SPZA200-400	A	850	203	82	5	13								426	50	81	3	3.5	90	Y280M-4	110	Y315S-4	160	Y315M₂-4
	B	830	150											410	47				75	Y280S-4	110	Y315S-4	132	Y315M₁-4
SPZAO200-400	C	750	145											370	36.5				55	Y250M-4	75	Y280S-4	110	Y315S-4
	D	670	106											332	27				45	Y225M-4	55	Y250M-4	75	Y280S-4
SPZA200-500	A													495	84	81	4	2.9						
	B													470	79				160	Y315M₁-4				
SPZAO200-500	C													400	63				110	Y315S-4	160	Y315M₂-4		
	D													330	48				75	Y280S-4	90	Y280M-4	132	Y315M₁-4
SPZA200-560	A													540	105	79.5	5	3						
	B													510	98									
SPZAO200-560	C													460	81				160	Y315M₁-4				
	D													350	62				110	Y315S-4	132	Y315M₂-4		
SPZA200-630	A													580	132	77.5	5	3.5						
	B													550	125									
SPZAO200-630	C													468	100									
	D													372	75				132	Y315M₁-4				
SPZA250-315	A													545	27	86.5	3	2.9	55	Y250M-4	75	Y280S-4	110	Y315S-4
	B													528	25				55	Y250M-4	75	Y280S-4	90	Y280M-4
SPZAO250-315	C													480	19				37	Y225S-4	55	Y250M-4	75	Y280S-4
	D													434	13				30	Y200L-4	37	Y225S-4	45	Y225M-4
SPZA250-400	A													660	49	87.5	5	3.2	132	Y315M₁-4	160	Y315M₂-4		
	B													630	48				110	Y315S-4				
SPZAO250-400	C													565	36				75	Y280S-4	110	Y315S-4	160	Y315M₂-4
	D													500	24				55	Y250M-4	75	Y280S-4	90	Y280M-4

上海水泵制造有限公司
SHANGHAI PUMP MANUFACTURE CO.LTD
SPZA/ZAO型

■ SPZA□ZAO型性能表 Table of Standard PerformAnce

型号 Model	叶轮型式	泵额定转速n=2900r/min Speed												泵额定转速n=1450r/min Speed											
		流量Q m³/h	扬程H m	效率η %	轴承架LK	汽蚀余量NPSHm	比重γ=1.00		比重γ=1.35		比重γ=1.84			流量Q m³/h	扬程H m	效率η %	轴承架LK	汽蚀余量NPSHm	比重γ=1.00		比重γ=1.35		比重γ=1.84	
							电机功率及型号 Motor												电机功率及型号 Motor					
							kw		kw		kw								kw		kw		kw	
SPZA250-500	A													800	82	83	5	5						
	B													770	76									
SPZAO250-500	C													700	58				160	Y315M₂-4				
	D													630	42				110	Y315S-4	160	Y315M₂-4		
SPZA250-560	A													860	108	82	5	4.2						
	B													830	98									
SPZAO250-560	C													760	78									
	D													665	57				160	Y315M₂-4				
SPZA250-630	A													855	128	80.5	6	4.2						
	B													816	119									
SPZAO250-630	C													720	96									
	D													625	71									
SPZA300-400	A													1050	48	87	4	5.8						
	B													1010	45				160	Y315M₂-4				
SPZAO300-400	C													900	34				132	Y315M₁-4	160	Y315M₂-4	160	Y315M₂-4
	D													780	26				90	Y280M-4	132	Y315M₁-4		
SPZA300-500	A													1240	78	88	5	4.8						
	B													1170	75									
SPZAO300-500	C													1015	57									
	D													870	42				160	Y315M₂-4				
SPZA300-560	A													1340	104	87	6	5.2						
	B													1280	97									
SPZAO300-560	C													1140	77									
	D													950	56									
SPZA300-630	A													1450	132	85	6	5.5						
	B													1375	125									
SPZAO300-630	C													1170	100									
	D													950	75									
SPZA400-500	A													1870	74	88	6	6.3						
	B													1800	70									
SPZAO400-500	C													1520	52									
	D													1300	38									
SPZA400-560	A													2040	98	88	6	7.5						
	B													1950	91									
SPZAO400-560	C													1760	74									
	D													1500	54									
SPZA400-630	A													2390	125	88	7	8.3						
	B													2280	117									
SPZAO400-630	C													1960	95									
	D													1610	70									

说明：*订货合同在泵型号上还应注明叶轮型式及轴承支架号，例如：选取SPZA40-250，叶轮型式为A，
1号轴承支架，应写成SPZA40-1250A。
*表中有流量、扬程值而无功率值的泵，其功率超过160KW，需订货时当面确定。

Note: *The type of impeller and No.of bearing bracket should be noted for the pump size in the ordering contract.etc,when SPZA 40-250 is selected, the impeller size should be A1,SPZA 40-1250A.It should be bearing bracket No.
*If there is the value of flow and head but without the power value of pumps in the list. When their power values exceed 16okw.It should be made sure when ordering.

■ SPZA、ZAO外形尺寸/Drawing of outer shapc and size of Model-SPZA,ZAO pump

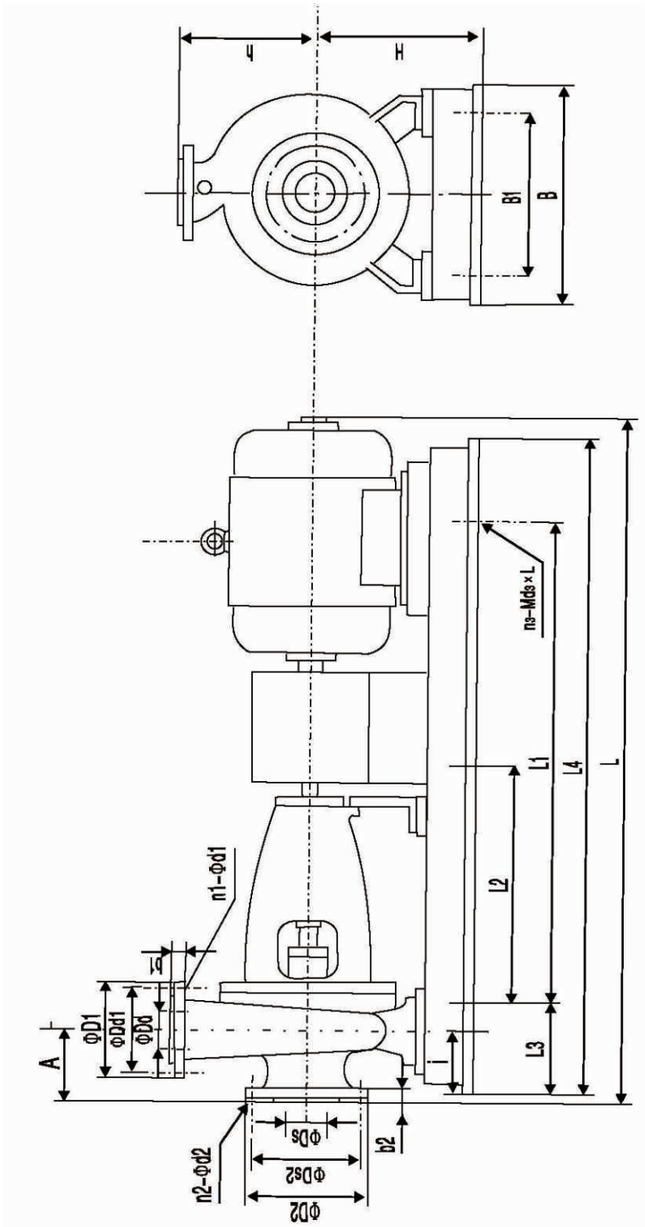

■ SPZA、ZAO泵进出口法兰尺寸 /The flange size of the input and output ports of Model-SPZA,ZAO pump

泵 型 号 Model of pump	ΦDd	ΦDd1	ΦD1	b1	n1-Φd1	ΦDs	ΦDs2	ΦD2	b2	n2-Φd2
SPZA(O)25-200	25	85	115	16	4-Φ14	40	110	150	18	4-Φ18
SPZA(O)25-250						50	125	125	20	
SPZA(O)25-315										
SPZA(O)40-160	40	110	150	18	4-Φ18	80	160	200	24	8-Φ18
SPZA(O)40-200										
SPZA(O)40-250										
SPZA(O)40-315										
SPZA(O)50-160	50	125	165	20	4-Φ18	80	160	200	24	8-Φ23
SPZA(O)50-200										
SPZA(O)50-250										
SPZA(O)50-315						100	190	235	24	
SPZA(O)50-400										
SPZA(O)80-160	80	160	200	24	8-Φ18	100	190	235	24	8-Φ23
SPZA(O)80-200										
SPZA(O)80-250										
SPZA(O)80-315										
SPZA(O)80-400										
SPZA(O)100-160	100	190	235	24	8-Φ23	100	190	235	24	8-Φ23
SPZA(O)100-200										
SPZA(O)100-250						150	250	300	28	8-Φ27
SPZA(O)100-315										
SPZA(O)100-400										
SPZA(O)100-500										
SPZA(O)150-200	150	250	300	28	8-Φ27	150	250	300	28	8-Φ27
SPZA(O)150-250										
SPZA(O)150-315										
SPZA(O)150-400										
SPZA(O)150-500										
SPZA(O)150-560										
SPZA(O)150-630										
SPZA(O)200-250	200	310	360	30	12-Φ27	200	310	360	30	12-Φ27
SPZA(O)200-315										
SPZA(O)200-400										
SPZA(O)200-500										
SPZA(O)200-560										
SPZA(O)200-630										
SPZA(O)250-315	250	370	425	32	12-Φ30	250	370	425	32	12-Φ30
SPZA(O)250-400										
SPZA(O)250-500										
SPZA(O)250-560										
SPZA(O)250-630										
SPZA(O)300-400	300	430	485	34	16-Φ30	300	430	485	34	16-Φ30
SPZA(O)300-500	300	450	515	42	16-Φ33	300	450	515	42	16-Φ33

■ SPZA、ZAO泵外型、安装尺寸/The outlook installation size of Model-SPZA、ZAO pump

型　号 Model	电机型号 Model of motor	轴承架号 Number of support stand of bearing	A	i	L_1	L_2	L_3	L_4	L	B_1	B	h	h_1	H	n3-Md3 × L	总重量 Total weight (kg)
SPZA25-200 SPZAO25-200	Y90S-4/1.1	1	100	80	660		170	1000	950	400	440	200	160	300	4-M12×220	106
	Y90L-4/1.5								975							
	Y90S-2/1.5								950							
	Y90L-2/2.2								975							
	Y100L-2/3								1020							117
	Y112M-2/4								1040							130
	$Y132S_1$-2/5.5				740		190	1120	1115							165
	$Y132S_2$-2/7.5															
	$Y160M_1$-2/11				840		205	1250	1240							232
SPZA25-250 SPZAO25-250	Y90S-4/1.1	1	140	90	660		170	1000	1060	400	440	225	180	300	4-M12×220	148
	Y90L-4/1.5								1085							
	$Y100L_1$-4/2.2				740		190	1120	1130							163
	$Y100L_2$-4/3															
	Y112M-4/4								1150							176
	Y112M-2/4	2							1190							194
	$Y132S_1$-2/5.5				840		205	1250	1315						4-M16×220	225
	$Y132S_2$-2/7.5															
	$Y160M_1$-2/11				940		230	1400	1440					365		303
	$Y160M_2$-2/15															
	Y160L-2/18.5								1485							
SPZA25-315 SPZAO25-315	$Y100L_1$-4/2.2	2	150	90	940		230	1400	1230	490	530	260	225	365	4-M16×220	224
	$Y100L_2$-4/3															
	Y112M-4/4								1250							237
	Y132S-4/5.5								1325							266
	Y132M-4/7.5								1365							266
	Y160M-4/11								1450							332
	$Y160M_2$-2/15															
	Y160L-2/18.5								1495							354
	Y180M-2/22								1520							389
	$Y200L_1$-2/30				1060	530	270	1600	1625						6-M16×220	471
	$Y200L_2$-2/37															
	Y225M-2/45								1665							565
	Y250M-2/55								1820	550	600			450		695
SPZA40-160 SPZAO40-160	Y90S-4/1.1	1	130	75	660		170	1000	1050	400	440	180	160	300	4-M12×220	127
	Y90L-4/1.5								1075							
	Y90L-2/2.2															127
	Y100L-2/3								1120							138
	Y112M-2/4								1140							151
	$Y132S_1$-2/5.5				740		190	1120	1215							183
	$Y132S_2$-2/7.5															
	$Y160M_1$-2/11				840		205	1250	1340							252
SPZA40-200 SPZAO40-200	Y90S-4/1.1	1	140	75	660		170	1000	1060	400	440	200	160	300	4-M12×220	131
	Y90L-4/1.5								1085							
	$Y100L_1$-4/2.2								1130							142
	$Y100L_2$-4/3															

■ 续表1 Table 1 (continued)

型　号 Model	电机型号 Model of motor	轴承架号 Number of support stand of bearing	A	i	L_1	L_2	L_3	L_4	L	B_1	B	h	h_1	H	n3-Md3 × L	总重量 Total weight (kg)
SPZA40-200 SPZAO40-200	Y112M-2/4	1	140	75	660		170	1000	1150	400	440	200	160	300	4-M12×220	155
	$Y132S_1$-2/5.5				740		190	1120	1225							187
	$Y132S_2$-2/7.5															
	$Y160M_1$-2/11				840		205	1250	1350							256
	$Y160M_2$-2/15															
	Y160L-2/18.5								1395							
SPZA40-250 SPZAO40-250	Y90S-4/1.1	1	140	90	660		170	1000	1060	400	440	225	180	300	4-M12×220	148
	Y90L-4/1.5								1085							
	$Y100L_1$-4/2.2				740		190	1120	1130							163
	$Y100L_2$-4/3															
	Y112M-4/4								1150							176
	Y132S-4/5.5				840		205	1250	1225							205
	Y132S-2/7.5	2			940		230	1400	1315							
	$Y160M_1$-2/11								1440						4-M16×220	225
	$Y160M_2$-2/15													365		303
	Y160L-2/18.5				940		230	1400	1485							359
	Y180M-2/22								1510							
	$Y200L_1$-2/30				940		230	1400	1615	490	530				4-M16×220	448
SPZA40-315 SPZAO40-315	$Y100L_2$-4/3	2	160	90	940		230	1400	1240	490	530	280	225	365	4-M16×220	224
	Y112M-4/4								1260							237
	Y132S-4/5.5								1335							257
	Y132M-4/7.5								1375							266
	Y160M-4/11								1460							332
	$Y160M_2$-2/15								1460							
	Y160L-2/18.5								1530							
	Y180M-2/22															
	$Y200L_1$-2/30				1060	530	270	1600	1635						6-M16×220	389
	$Y200L_2$-2/37								1675							471
	Y225M-2/45								1675							565
	Y250M-2/55								1820	550	600			450		
	Y280S-2/75				1200	600	300	1800	1900	670	720					820
SPZA50-160 SPZAO50-160	Y90S-4/1.1	1	140	75	660		170	1000	1060	400	440	185	160	300	4-M12×220	130
	Y90L-4/1.5								1085							130
	$Y100L_1$-4/2.2								1130							141
	Y100L-2/3	2			740		190	1120	1220							128
	Y112M-2/4								1240							134
	$Y132S_1$-2/5.5				840		205	1250	1315							166
	$Y132S_2$-2/7.5															179
	$Y160M_1$-2/11				940		230	1400	1440					315	4-M16×220	210
	$Y160M_2$-2/15															285
SPZA50-200 SPZAO50-200	Y90S-4/1.1	1	150	75	660		170	1000	1070	400	440	200	160	300	4-M16×220	134
	Y90L-4/1.5								1095							134
	$Y100L_1$-4/2.2								1140							145
	$Y100L_2$-4/3								1140							145
	Y112M-4/4								1160							158

续表2 Table 2 (continued)

型 号 Model	电机型号 Model of motor	轴承架号 Number of support stand of bearing	A	i	L_1	L_2	L_3	L_4	L	B_1	B	h	h_1	H	n3-Md3 × L	总重量 Total weight (kg)
SPZA50-200 SPZAO50-200	Y132S_1-2/7.5	2	150	75	840		205	1250	1325	400	440	200	160	300	4-M16×220	212
	Y160M_1-2/11				940		230	1400	1450					315		287
	Y160M_2-2/15															
	Y160L-2/18.5								1495							
	Y180M-2/22								1520					365		
	Y200L_1-2/30								1625							348
SPZA50-250 SPZAO50-250	Y100L_1-4/2.2	2	155	90	740		190	1120	1235	400	440	240	180	300	4-M12×220	184
	Y100L_2-4/3															
	Y112M-4/4								1255							197
	Y132S-4/5.5				840		205	1250	1330							228
	Y132M-4/7.5								1370							
	Y160M_2-2/15				940		230	1400	1455					365	4-M16×220	303
	Y160L-2/18.5								1500							
	Y180M-2/22								1525							362
	Y200L_1-2/30				1060	530	270	1600	1630	490	530				6-M16×220	452
	Y200L_2-2/37								1630							
	Y225M-2/45								1670							
SPZA50-315 SPZAO50-315	Y100L_2-4/3	2	175	90	940		230	1400	1255	490	530	280	225	365	4-M16×220	230
	Y112M-4/4								1275							243
	Y132S-4/5.5								1350							272
	Y132M-4/7.5								1390							
	Y160M-4/11								1475							338
	Y160L-4/15								1520							
	Y180M-2/22	3			1060	530	270	1600	1610	490	530				6-M16×220	428
	Y200L_1-2/30															505
	Y200L_2-2/37								1715							
	Y225M-2/45								1755							600
	Y250M-2/55								1870	550	600			450		723
	Y280S-2/75				1200	600	300	1800	1940	670	720					986
	Y280M-2/90								1990							
SPZA50-400 SPZAO50-400	Y132M-4/7.5	2	165	105	940		230	1400	1380	490	530	335	280	430	4-M16×220	321
	Y160M-4/11								1460							388
	Y160L-4/15								1510							
	Y180M-4/18.5								1535							
	Y180L-4/22								1575							444
	Y200L-4/30				1060	530	270	1600	1640						6-M16×220	526
	Y225M-4/45	3							1745							654
	Y250M-2/55								1860							777
	Y280S-2/75				1200	600	300	1800	1930	670	720			450		1029
	Y280M-2/90								1980							
	Y315S-2/110								2130							1357
	Y315M_1-2/132								2180							
	Y315M_2-2/160															

续表3 Table 3 (continued)

型 号 Model	电机型号 Model of motor	轴承架号 Number of support stand of bearing	A	i	L_1	L_2	L_3	L_4	L	B_1	B	h	h_1	H	n3-Md3 × L	总重量 Total weight (kg)
SPZA80-160 SPZAO80-160	Y90S-4/1.1	2	155	90	740		190	1120	1165	400	440	220	160	300	4-M12×220	166
	Y90L-4/1.5								1190							
	Y100L_1-4/2.2								1235							177
	Y100L2-4/3															
	Y112M-4/4															190
	Y132S_1-2/5.5				840		205	1250	1330							221
	Y132S_2-2/7.5															
	Y160M_1-2/11				940		230	1400	1455					315	4-M16×220	297
	Y160M_2-2/15															
	Y160L-2/18.5								1500							
SPZA80-200 SPZAO80-200	Y90L-4/1.5	2	160	90	660		190	1120	1150	400	440	240	160	300	4-M12×220	154
	Y100L_1-4/2.2				740				1150							169
	Y100L_2-4/3															
	Y112M-4/4								1170							182
	Y132S-4/5.5								1245							210
	Y132M-4/7.5								1285							
	Y160M_1-2/11				840		205	1250	1370					365		280
	Y160M_2-2/15															
	Y160L-2/18.5				940		230	1400	1415						4-M16×220	
	Y180M-2/22								1440							348
	Y200L_1-2/30								1545							424
	Y200L_2-2/37								1545							
SPZA80-250 SPZAO80-250	Y100L_2-4/3	2	165	105	840		205	1250	1245	400	440	260	200	350	4-M12×220	205
	Y112M-4/4								1265							219
	Y132S-4/5.5								1340							247
	Y132M-4/7.5								1380							247
	Y160M-4/11				940		230	1400	1465					365	4-M16×220	324
	Y160L-4/15								1510							324
	Y180M-2/22								1535							380
	Y200L_1-2/30				1060	530	270	1600	1640	490	530				6-M16×220	468
	Y200L_2-2/37								1640							468
	Y225M-2/45								1680							563
	Y250M-2/55								1795	550	600					686
	Y280S-2/75				1200	600	300	1800	1865	670	720			450		948
	Y280M-2/90								1915							948
SPZA80-315 SPZAO80-315	Y132S-4/5.5	2	185	105	940		230	1400	1400	490	530	300	225	365	4-M16×220	288
	Y132M-4/7.5								1440							288
	Y160M-4/11								1525							354
	Y160L-4/15								1570							354
	Y180M-4/18.5				1060	530	270	1600	1595						6-M16×220	415
	Y180L-4/22								1635							415
	Y200L_2-2/37								1700							492
	Y225M-2/45								1740							588
	Y250M-2/55				1200	600	300	1800	1855	670	720			450		710
	Y280S-2/75								1925							972
	Y280M-2/90								1975							972

续表4 Table 4 (continued)

型 号 Model	电机型号 Model of motor	轴承架号 Number of support stand of bearing	A	i	L_1	L_2	L_3	L_4	L	B_1	B	h	h_1	H	n3-Md3 × L	总重量 Total weight (kg)
SPZA80-400 SPZAO80-400	Y160M-4/11	2	180	105	940		230	1400	1520	490	530	350	280	430	4-M16×220	398
	Y160L-4/15								1565							398
	Y180M-4/18.5				1060	530	270	1600	1590						6-M16×220	432
	Y180L-4/22								1630							459
	Y200L-4/30								1695							537
	Y225S-4/37								1740							631
	Y225M-4/45								1765							631
	Y280S-2/75	3			1200	600	300	1800	1985	670	720			450		1049
	Y280M-2/90								2035							1049
	Y315S-2/110				1600	800	320	2240	2135	730	780			570	6-M20×220	1250
	Y315M₁-2/132								2235							1463
	Y315M₂-2/160								2235							1463
SPZA100-160 SPZAO100-160	Y90S-4/1.1	2	175	90	740		190	1120	1185	400	440	260	160	300	4-M12×220	174
	Y90L-4/1.5								1210							174
	Y100L₁-4/2.2								1255							185
	Y100L₂-4/3								1255							185
	Y112M-4/4								1275							198
	Y132S-4/5.5				840		205	1250	1350							229
	Y132S₁-2/7.5													365		229
	Y160M₁-2/11				940		230	1400	1475						4-M16×220	305
	Y160M₂-2/15								1475							305
	Y160L-2/18.5								1520							305
	Y180M-2/22				1060	530	270	1600	1545							364
	Y200L₁-2/30								1650	490	530				6-M16×220	453
	Y200L₂-2/37								1650							453
SPZA100-200 SPZAO100-200	Y100L₂-4/3	2	165	90	840		205	1250	1285	400	440	270	200	350	4-M12×220	204
	Y112M-4/4								1305							217
	Y132S-4/5.5								1380							246
	Y132M-4/7.5								1420							246
	Y160M-4/11				940		230	1400	1505					365	4-M16×220	322
	Y160L-2/18.5								1550							322
	Y180M-2/22				1060	530	270	1600							6-M16×220	
	Y200L₁-2/30								1680	490	530					467
	Y200L₂-2/37								1680							467
	Y225M-2/45								1720							561
	Y250M-2/55								1835	550	600			450		684
	Y280S-2/75				1200	600	300	1800	1905	670	720					947
SPZA100-250 SPZAO100-250	Y132S-4/5.5	2	200	105	940		230	1400	1415	490	530	290	225	365	4-M16×220	296
	Y132M-4/7.5								1455							296
	Y160M-4/11								1540							362
	Y160L-4/15								1585							362
	Y180M-4/18.5				1060	530	270	1600	1610						6-M16×220	423
	Y200L₂-2/37								1715							500
	Y225M-2/45								1755							595
	Y250M-2/55								1775							
	Y280S-2/75				1230	600	300	1800	1940	670	720			450		980
	Y280M-2/90								1990							980

续表5 Table 5 (continued)

型 号 Model	电机型号 Model of motor	轴承架号 Number of support stand of bearing	A	i	L_1	L_2	L_3	L_4	L	B_1	B	h	h_1	H	n3-Md3 × L	总重量 Total weight (kg)
SPZA100-315 SPZAO100-315	Y160M-4/11	2	195	105	940		230	1400	1535	490	530	320	260	430	4-M16×220	366
	Y160L-4/15								1580							366
	Y180M-4/18.5				1060	530	270	1600	1650					450	6-M16×220	430
	Y180L-4/22								1645							430
	Y200L-4/30								1710							509
	Y225S-4/37															603
	Y280S-2/75				1200	600	300	1800	2000	670	720	320		530	6-M16×220	1001
	Y280M-2/90	3							2050							1001
	Y315S-2/110				1400	700		2000	2000							1334
	Y315M₁-2/132								2250							1334
	Y315M₂-2/160								2250							1334
SPZA100-400 SPZAO100-400	Y160L-4/15	3	210	125	1060	530	270	1600	1660	550	600	380	280	430	6-M16×220	493
	Y180M-4/18.5								1725							552
	Y180L-4/22								1725							552
	Y200L-4/30								1790							630
	Y225S-4/37								1835							725
	Y225M-4/45								1860							725
	Y250M-4/55				1200	600	300	1800	1945	670	720					838
	Y280S-2/75								2015							1077
	Y315S-2/110				1600	800	320	2240	2265	730	780			570	6-M20×220	1542
	Y315M₁-2/132	4							2315							1542
	Y315M₂-2/160								2315							1542
SPZA100-500 SPZAO100-500	Y200L-4/30	3	220	125	1200	600	300	1800	1875	670	720	450	355	530	6-M16×220	730
	Y225S-4/37								1915							826
	Y225M-4/45								2025							865
	Y250M-4/55								2025							917
	Y280S-4/75				1400	700		2000	2095							1163
	Y280M-4/90								2145							1163
	Y315S-4/110								2295							1475
SPZA150-200 SPZAO150-200	Y100L₂-4/3	2	200	105	940		230	1400	1320	490	530	310	225	365	4-M16×220	274
	Y112M-4/4								1340							274
	Y132S-4/5.5								1415							274
	Y132M-4/7.5								1455							274
	Y160M-4/11								1540							340
	Y160L-4/15								1585							340
	Y180M-2/22				1060	530	270	1600	1610	490	530				6-M16×220	401
	Y200L₁-2/30								1715							478
	Y200L₂-2/37								1715							478
	Y225M-4/45								1755							573
	Y250M-2/55								1870	550	600			450		696
	Y280S-2/75				1200	600	300	1800	1940	670	720					958
	Y280M-2/90								1990							958
SPZA150-250 SPZAO150-250	Y160M-4/11	2	200	105	940		230	1400	1540	490	530	315	250	430	4-M16×220	379
	Y160L-4/15								1585							379
	Y180M-4/18.5				1060	530	270	1600	1610						6-M16×220	443
	Y180L-4/22								1650							443
	Y200L-4/30								1715							521

续表6 Table 6 (continued)

型 号 Model	电机型号 Model of motor	轴承架号 Number of support stand of bearing	A	i	L_1	L_2	L_3	L_4	L	B_1	B	h	h_1	H	n3-Md3 × L	总重量 Total weight (kg)
SPZA150-250 SPZAO150-250	Y280S-2/75	3	200	105	1200	600	300	1800	2005	670	720	315	250	450	6-M16×220	1017
	Y280M-2/90								2055							1017
	Y315S-2/110				1400	700		2000	2205					530		1350
	Y315M1-2/132								2255							1350
	Y315M2-2/160								2255							1350
SPZA150-315 SPZAO150-315	Y160L-4/15	3	205	125	1060	530	270	1600	1655	550	600	370	280	450	6-M16×220	448
	Y180M-4/18.5								1680							507
	Y180L-4/22								1720							507
	Y200L-4/30								1785							585
	Y225S-4/37								1830							679
	Y225M-4/45								1855							679
	Y250M-4/55				1200	600	300	1800	1940	670	720					793
	Y280M-2/90	4							2060							1032
	Y315S-2/110				1600	800	320	2240	2210	730	780			570	6-M20×220	1446
	Y315M1-2/132								2260							1446
	Y315M2-2/160								2260							1446
SPZA150-400 SPZAO150—400	Y200L-4/30	3	230	125	1200	600	300	1800	1880	670	720	410	315	530	6-M16×220	676
	Y225S-4/37								1925							772
	Y225M-4/45								2035							863
	Y250M-4/55								2035							863
	Y280S-4/75				1400	700		2000	2105							1109
	Y280M-4/90								2155							1109
	Y315S-4/110								2305							1421
SPZA150-500 SPZAO150-500	Y225M-4/45	3	240	125	1200	600	300	1800	1960	670	720	500	375	600	6-M16×220	861
	Y250M-4/55				1400	700		2000	2115							950
	Y280S-4/75								2115							1199
	Y280M-4/90								2165							1199
	Y315S-4/110				1600	1600	320	1600	2240	730	780			640	6-M16×400	1594
	Y315M1-4/132								2240							1594
	Y315M2-4/160								2240							1594
SPZA150-560 SPZAO150—560	Y280S-4/75	4	250	155	1400	700	300	2000	2175	670	720	500	510	600	6-M16×400	1358
	Y280M-4/90								2225							1358
	Y315S-4/110				1600	800	320	2240	2375	730	780			640	6-M20×220	1752
	Y315M1-4/132								2425							1752
	Y315M2-4/160								2425							1752
SPZA150-630 SPZAO150-630	Y280S-4/75	4	260	260	1600	800	300	2240	2235	920	970	540	420	700	6-M16×220	1524
	Y280M-4/90								2285							1524
	Y315S-4/110								2435							1847
	Y315M1-4/132								2435							1847
	Y315M2-4/160								2435							1847
SPZA200-250 SPZAO200-250	Y160L-4/15	3	235	125	1060	530	270	1600	1755	550	600	300	390	450	6-M20×400	486
	Y180M-4/18.5								1780							545
	Y180L-4/22								1820							545
	Y200L-4/30				1200	600	300	1800	1855	670	720					645
	Y225S-4/37								1930							741
	Y225M-4/45								1955							741

续表7 Table 7 (continued)

型 号 Model	电机型号 Model of motor	轴承架号 Number of support stand of bearing	A	i	L_1	L_2	L_3	L_4	L	B_1	B	h	h_1	H	n3-Md3 × L	总重量 Total weight (kg)
SPZA200-250 SPZAO200-250	Y280S-2/75	3	235	125	1400	700	300	2000	2110	670	720	390	390	530	6-M16×220	1092
	Y280M-2/90								2160							1092
	Y315S-2/110				1600	800	320	2240	2310	730	780			570	6-M20×400	1484
	Y315M1-2/132								2360							1484
	Y315M2-2/160								2360							1484
SPZA200-315 SPZAO200-315	Y180M-4/18.5	3	245	125	1060	530	270	1600	1790	610	660	420	315	530	6-M16×220	563
	Y180L-4/22								1830							563
	Y200L-4/30				1200	600	300	1800	1895	670	720					665
	Y225S-4/37								1940							761
	Y225M-4/45								1965							761
	Y250M-4/55								2050							852
	Y280S-4/75				1400	700		2000	2120							1098
SPZA200-400 SPZAO200—400	Y225M-4/45	3	260	125	1200	600	300	1800	1980	670	720	470	350	530	6-M16×220	823
	Y250M-4/55								2065							914
	Y280S-4/75				1400	700		2000	2135							1160
	Y280M-4/90								2185							1160
	Y315S-4/110				1600	800	320	2240	2335	730	780			570	6-M20×400	1552
	Y315M1-4/132								2385							1552
	Y315M-4/160								2385							1552
SPZA200-500 SPZAO200-500	Y280S-4/75	4	265	155	1400	700	300	2000	2190	670	720	540	400	600	6-M16×220	1299
	Y280M-4/90								2240							1299
	Y315S-4/110				1600	800	320	2240	2390	730	780			600	6-M20×400	1694
	Y315M1-4/132								2440							1694
	Y315M2-4/160								2440							1694
SPZA200-560 SPZAO200—560	Y315S-4/110	5	270	155	1600	800	320	2240	2550	730	780	570	570	640	6-M20×400	1855
	Y315M1-4/132								2600							1855
	Y315M2-4/160								2600							1855
SPZA200-630 SPZAO200-630		5	280	155												
SPZA250-315 SPZAO250-315	Y200L-4/30	3	255	125	1200	600	300	1800	1905	670	720	470	360	530	6-M16×220	729
	Y225S-4/37								1950							825
	Y225M-4/45								1975							825
	Y250M-4/55								2060							916
	Y280S-4/75				1400	700		2000	2130							1162
	Y280M-1/90								2180							1162
	Y315S-4/110								2330							1474
SPZA250-400 SPZAO250-400	Y250M-4/55	4	280	155	1400	700	300	2000	2135	670	720	520	360	530	6-M16×220	1043
	Y280S-4/75								2205							1283
	Y280M-4/90								2255							1283
	Y315S-4/110				1600	800	320	2240	2405	730	780			570	6-M20×400	1283
	Y315M1-4/132								2455							1675
	Y315M2-4/160								2455							1675
SPZA250-500 SPZAO250-500	Y315S-4/110	5	300	155	1600	800	320	2240	2580	730	780	610		640	6-M20×400	1846
	Y315M1-4/132								2630							1846
	Y315L1-4/160								2630							1846

■ 续表8 Table 8 (continued)

型　号 Model	电机型号 Model of motor	轴承架号 Number of support stand of bearing	A	i	L_1	L_2	L_3	L_4	L	B_1	B	h	h_1	H	n3-Md3 × L	总 重 量 Total weight (kg)
SPZA2500-560		5	290	155												
SPZA300-400 SPZAO300-400	Y280M-2/90	4	300	155	1400	700	320	2000	2275	670	720	590	510	600	6-M16×220	1368
	Y315S-2/110				1600	800		2240	2475	730	780			640	6-M20×220	1763
	Y315M$_1$-2/132								2475							1763
	Y315M$_2$-2/160								2475							1763
SPZA300-500 SPZAO300-500		5														

说明：本表只提供了配套Y、YB系列小于160kw电机的安装尺寸，配套大于等于185kw的电机的安装尺寸请提供电机型号后来函索取安装尺寸。
Explanation:This table only provides the installation dimension suited for motors less than 160 KW ofY and YB series;for the installation dimension of motors more than 185KW,please povide the motor modeland ask for the installation dimension by writing.

上海水泵制造有限公司
SHANGHAI PUMP MANUFACTURE CO.LTD
SPZA/ZAO型

■ 各种设计结构/Various technical designs

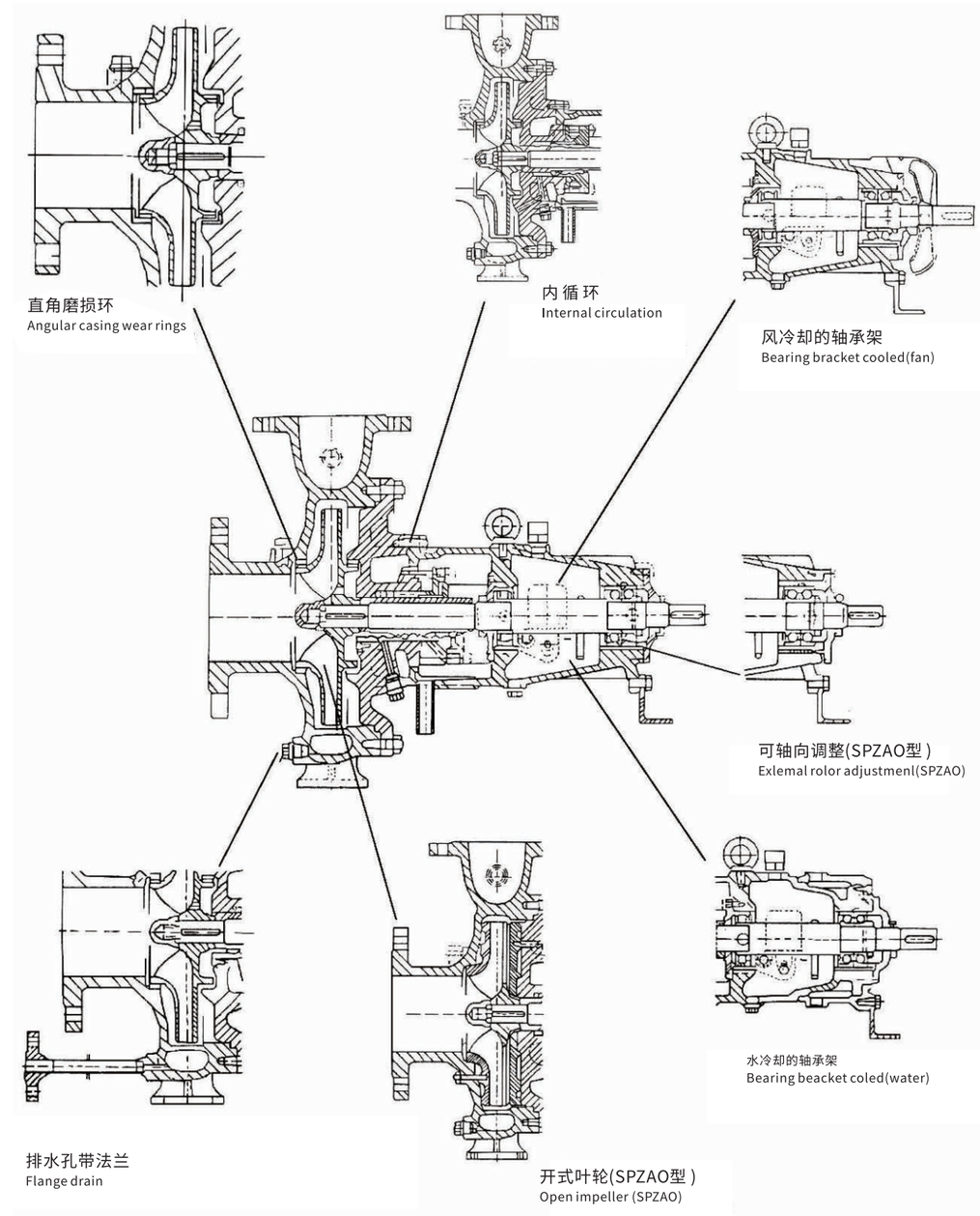

■ 剖面图/Sectional Drawing

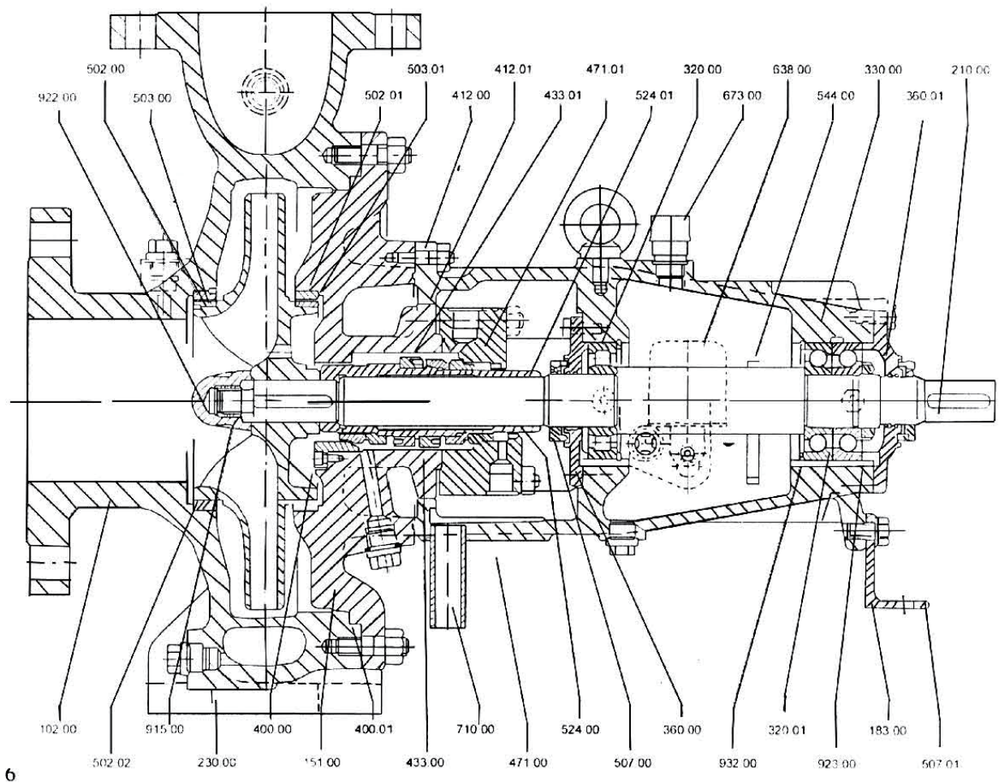

图 6
Fig 6

102.00泵体	Volute casing	412.00 O形环	O-ring	507.01防压圈	Defleclor
161.00泵盖	Casing cover	412.01 O形环	O-ring	524.00轴套	Shaft sleeve
183.00支脚	Supporting root	433.00机械密封	Mechanical seal	524.01轴套	Shaft sleeve
210.00轴	Shaft	433.01机械密封	Mechanical seal	638.00恒位油杯	Constant-level-oiler
*230.00叶轮	Impeller	471.00密封盖	Sealing cover	644.00甩油环	Lubricating ring
320.00耐磨轴承	Antifriction bearing	471.00密封盖	Sealing cover	673.00油分离器	Vent filter
320.01耐磨轴承	Antifriction bearing	* 502.00泵体磨损环	Casing wear ring	710.00排液管	Pipe
330.00轴承架	Bearing bracket	*502.01泵体磨损环	Casing wear ring	915.00钢丝螺母	Threaded insert
360.00轴承盖	Bearing cover	*502.01泵体磨损环	Casing wear ring	*922.00叶轮螺母	Impeller nut
360.01轴承盖	Bearing cover	*503.00叶轮磨损环	Impeller wear ring	923.00轴承螺母	Bearing nut
*400.00平垫片	Flat gasket	*503.01叶轮磨损环	Impeller wear ring	923.00卡环	Cireip
400.01平垫片	Flat gasket	507.00防压圈	Deflector		

上海水泵制造有限公司
SHANGHAI PUMP MANUFACTURE CO.LTD
SPZA/ZAO型

■ 轴封/Shaft seals

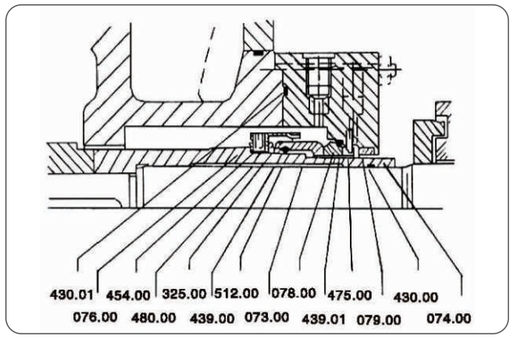

图7、单端面平衡型机械密封
Fig.7 Single mechanical seal balanced

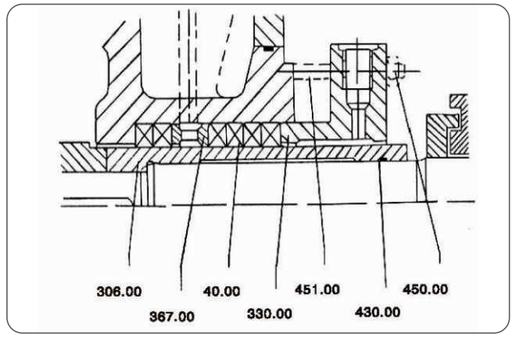

图8、带冷却夺盖和水封环的填料密封
Fig.8 Packed stuffing box with lanten ning and gland cooling

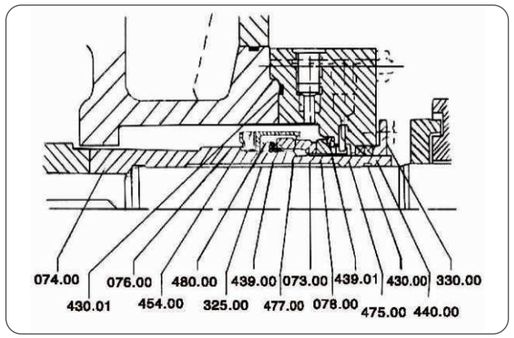

图9、带辅助填料密封的单端面平衡型机械密封
Fig.9 Single mechanical seal balanced with auxillary stuffing box

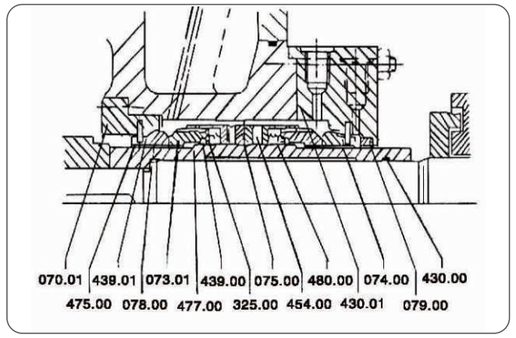

图10、带加压系统的双端面平衡型机械密封
Fig.10 Double mechainical seal balanced,with pressurized system

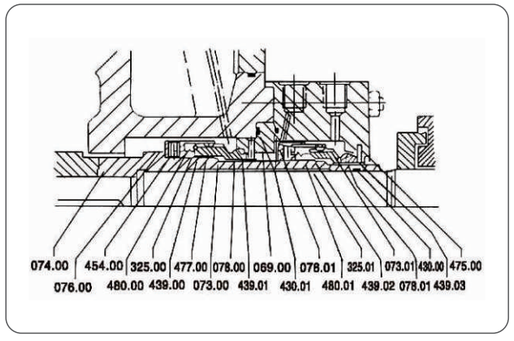

图11串联式机械密封
Fig.11 Tandem mechanical seal.

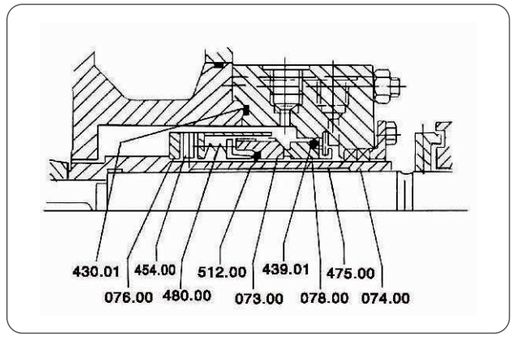

图12、单端面非平衡型机械密封
Fig.12 Single mechanical seal unbalanced

轴承支架号 Bearing beacket size	机械密封型式Mechanical seal size			
	单端面平衡型 Single balanced	单端面非平衡型 Single unbalanced	双 端 面 Double	串 联 式 Tandem
Lk0	119B-028	106U-028	119B-028/119B-028	119B-028/119B-024
Lk1	119B-033	106U-038	119B-028/119FB-038	119B-038/119B-033
Lk2	119B-043	106U-048	119B-048/119FB-048	119B-048/119FB-043
Lk3	119B-053	106U-060	119B-060/119FB-060	119B-060/119FB-053
Lk4	119B-065	无None	119B-070/119FB-070	119B-070/119FB-065
Lk5	119B-075	无None	119B-080/119FB-080	119B-080/119FB-075
Lk6	119B-095	无None	119B-100/119FB-100	119B-100/119FB-095
Lk7	无None	无None	无None	无None

■ 轴封零件单/Shaftseals part list

069.00静环座	Stat.seal ring pick-up	306.00轴套	Shaft sleeve	439.03密封垫	Saling ring
070.01静环座	Cover	325.00圆板	Disc	440.00填料	Packing ring
073.00动环	Rot.seal ring	325.01圆板	Disc	451.00双头螺栓	Stud bott
073.01动环	Rot.seal ring	330.00填料压盖	Stuffing box glanc	454.00双头螺栓	Setscrew
074.00轴套	Shaft sleeve	367.00水封环	Lantern ring	460.00螺母	Nut
076.00弹簧座	Sleeve mech.seal	430.00O型环	O-ring	475.00销钉	Pin
076.01弹簧座	Sleeve mech.seal	430.01O型环	O-ring	477.00销钉	Pin
078.00静环	Stat.seal ring	439.00密封垫	Sealing ring	480.00弹簧	Spring
078.01静环	Stat.seal ring	439.01密封垫	Sealing ring	480.01弹簧	Spring
079.00节流衬套	Throtling bush	439.02密封垫	Sealing ring	512.00开口环	Snap ring

■ 叶轮/Impellers

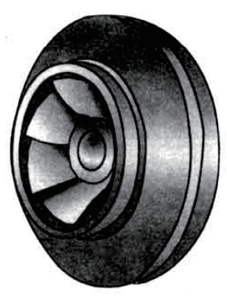

图13 闭式叶轮
Fig 13 Closed impeller

图14开式叶轮
Fig 14 Open-impeller

上海水泵制造有限公司
SHANGHAI PUMP MANUFACTURE CO.LTD
SPZA/ZAO型

■ 压力-温度图表/Pressure-Temperature-Diagram

最大容许工作压力/Max permissible operating pressure

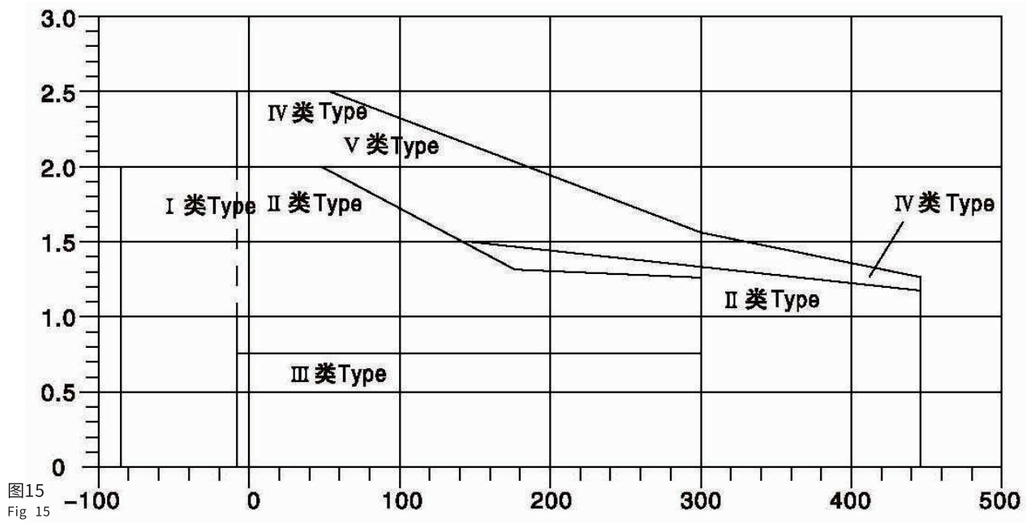

图15
Fig 15

温度t(℃)/Temperature(℃)

类 型 Type	材料 Materials
Ⅰ	1.4321(B). 1.4308(304). 1.4446(304L)
Ⅱ	1.4410(M). 1.4408(306). 1.6902(306L). 2.4879(804)
	1.4500(904). 1.4536(904L)钛及钛合金Titanium and titanium alloy
Ⅲ	E HT20-40
Ⅳ	G25
Ⅴ	ZG1Cr13

最大容许试验压力(20℃)/Max permissble operating pressure(20℃)

材料 Materials		泵体CasingMpa	法兰 Flanges					
泵体 Casing	泵体螺栓 Casingscrews		GB	DIN			ANSI	
			PN25	PN10	PN16	PN25	Class 125	Class 150
Ⅰ Ⅱ	1Cr18Ni9	3.0	2565-81		2543	2544	-	B16.5
Ⅲ	2Cr13	1.2		2532	2533	2534	B16.1	
Ⅳ		3.75		-	2543	2544	-	B16.5
Ⅴ		3.75		-	2543	2544	-	B16.5

■ 各种系列泵的标准部件的互换/Interchangeable Modular Elements for Various Sizes

API610 单级流程泵(轻、中和重型)由4个系列组成，系列按压力等级割分：有标准水力部件和轴承架(动力端)
The new single-stage API610 process pump programme of SULZER (light,medium or heavy duty)consists of 4 series divided into pressure ranges having standardized hydraulics and bearing bracket design(power ene).

因此，该泵保证在最经济的情况下，满足市场的需要。备件少，泵使用范围广，适应性强，有4个系列：
每个系列有40多种规格，仅用9个重型整体轴承架。叶轮通用，各种规格的轴、轴套、轴承和机械密封也相同。
The programme therefore ensures that market requirements are met in the best economical way.i.e.Economic spare part stoclleeping and rapid adaptation to alternative operating conditions.For 4 series with 40 or more sizes in each the same impeller is used and or 9 one-piece heavy duty beavy duty bearing brackets are required.Shaft, shaft sleeve.mechanical seal and beaings are therefore identical for a variety of sizes.

四个系列的压力范围 4 series:divided into pressure ranges	不同压力下的泵体结 构 Casing according to design pressure used	四个系列泵的叶轮通用开式叶轮只用于SPZA/HZE系列 Standardized hydraulics for all 4 series Open impaller dasign for series SPZA/HZE	不同压力的泵盖结构 Casing cover ac-cording to design pressure used	九种轴承架的选取，取决于工作 环境是否需要冷却。 9 bearing brackets,depending on application conditions cooled or uncooled cooling achieved by fan as standard though water- cooled design possible
(ZA)可达2.5MPa 有46个规格 ZA Up to 2.5 MPa 46 sizes	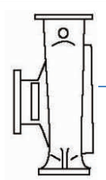	开式 	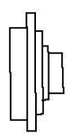	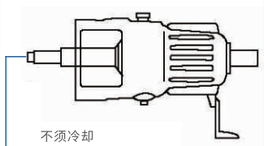 不须冷却 Uncooled(ribs)
(HZE)可达5.0MPa 有46个规格 HZE Up to 5.0 MPa 46 sizes	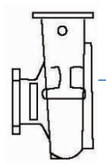	Open 闭式	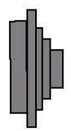	
(HZF)可达7.5MPa 有40个规格 HZF Up to 7.5 MPa 40 sizes	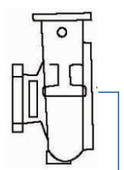	 Closed	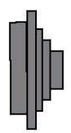	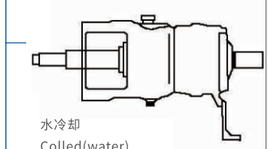 水冷却 Colled(water)
(HZU)可达13.5MPa 有40个规格 HZU Up to 13.5 MPa 40 sizes	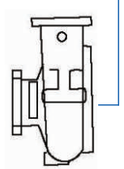		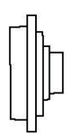	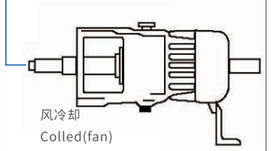 风冷却 Colled(fan)