Subject to technical modifications
保留不预先通知进行技术修改的权利

上海水泵制造有限公司（上海水泵厂）
Shanghai Pump Manufacture Co.,Ltd (ShangHai Pump Works)

地 址：上海市奉贤区青村镇光大路228号
Address: No.228 GuangDa Road, QingCun Town,FengXian District, Shanghai
电 话 Tel： 86-21-37595000 37595008 64302191 37595033
传 真 Fax：86-21-37595009
网 址 Http：//www.sh-pump.com
邮 箱 E-Mail：sh-pump@sh-pump.com
销 售/服务热线 Sales/service hotline：400-021-7008

SPMC

Y型

离 心 油 泵

CENTRIFUGAL OIL PUMP

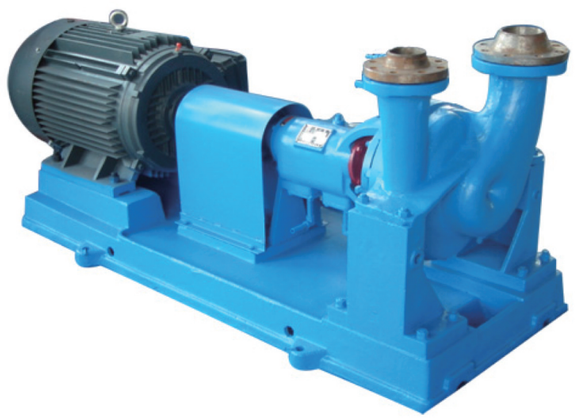

上海水泵制造有限公司（上海水泵厂）
Shanghai Pump Manufacture Co.,Ltd (ShangHai Pump Works)

目　录

Contents

一、概　　述

Y 型系列油泵用以输送介质温度－45℃～+400℃，不含颗粒的石油产品及其它类似产品，流量为 9.9～500 米 ^{3}/时,扬程为 38～650 米。

泵型号的意义：

200 Y Ⅱ — 150 × 2 A

- A：叶轮经第一次切割
- 2：表示级数为 2 级
- 150：表示单级扬程为 150 米
- Ⅱ：表示为第Ⅱ种材料
- Y：表示单吸离心油泵（SY 表示双吸离心油泵）
- 200：表示吸入口直径为 200 毫米

一. General

Y series oil pump can be used to deliver particle-free petroleum products or similar of –45℃-- +400℃. The head is from 38 to 650 m at capacity of from 9.9 to 500 m^3 / h.

Designation

200 Y Ⅱ — 150 × 2 A

- A: Impeller Cut down
- 2: Stages
- 150: Head with one stage
- Ⅱ: Material
- Y: Single suction oil pump (SY means Double suction)
- 200: Nominal suction nozzle

二、结 构 说 明

我厂生产系列中有四种结构型式：单级悬臂式、两级悬臂式的双级两端支承、多级节段式。

1、单级悬臂式和双级悬臂式的主要结构：

（1）壳体主要由泵体、泵盖组成，承受全部工作压力和介质温度引起的热负荷，双级泵有级间隔板将两个叶轮隔开。

（2）转子部件由叶轮、叶轮螺母、轴与轴套组成，其轴向力的平衡，单级泵由叶轮上的平衡孔卸压，双级泵用叶轮背对装置来达到平衡。

（3）轴承采用滚动轴承，安装在托架内，对转子起支承作用，并可承受部分轴向力。轴承用稀油润滑,按需要可用水冷却。

（4）密封部分：在泵体、泵盖和叶轮上，分别装有可以更换的密封环，在级间隔板处，有隔板衬套，都有较小的径向间隙来减少泄漏。轴封采用标准的机械密封。

2、两端支承式，分为两级单吸和两级双吸两种，其基本结构与悬臂式相同，主要区别为泵轴穿过叶轮，由位于泵体两侧轴承架内轴承支承，泵轴两端都装有机械密封。

3、多级节段式的首级叶轮为单吸式，我厂生产的两种型式基本相同。

（1）壳体主要吸入段、中段、压出段和导叶等组成，承受全部工作和由介质温度引起的热负荷；各段之间用穿杠螺栓固定。

（2）转子部件主要由叶轮、轴、平衡盘与轴套组成，轴向力由平衡盘平衡。

（3）轴承部分：用滚柱轴承，以稀油润滑，并用水冷却。

（4）密封部分：在吸入段、中段和叶轮上，分别装有可以更换的密封环，相邻两叶轮间，有导叶衬套和叶轮挡套，保持较小的径向间隙，减少泄漏；轴封采用标准的机械密封。

4、泵一般均配带防爆电机，用加长的弹性联轴器联接；从联轴器端看泵，均为逆时针方向旋转（BY300—150×2 和 SY500—150×2 型转向为顺时针）。泵与介质接触和受温度影响的零件材料，见主要零件材料表（第 21 页）供用户选用。泵的进出口方向均为垂直向上。

5、机械密封

我厂 Y 型油泵采用的机械密封，现在均按 JB1472—75 规范设计，如使用单位无特殊要求，我厂均采用 103 型单端面非平衡型机械密封，或 109 型单端面平衡型机械密封；配对材料按油类考虑，如有其他特殊要求，应与我厂联系。对于机械密封的选用、结构、安装、使用和维护，另见“机械密封安装说明书”。

二. Description of Structure

There are 4 types of oil pumps: single stage overhung type; two stage overhung type, two stages between lacings type and multistage ring section type.

1. Single stage overhung type and two stage overhung type

（1） The casing consists of pump casing and casing cover and has to bear the maximum operating pressure and any heat load caused by temperature of medium. An interstage diaphragm separates the two impellers for two stage-overhung type.

（2） The rotor consists of impeller, impeller nut, shaft and shaft sleeve. The axial trust force is balanced by balance holes in impeller for single stage type. For two stage type two impellers are back-to-back arranged on the shaft in order to reduce to the most extent the effect of axial thrust.

（3） The roller bearings are positioned in the bracket to support the rotor and to bear the residual thrust. Bearings are oil lubricated and can be cooled down with water if necessary.

（4） Sealing: Exchangeable seal rings are mounted among pump casing, casing cover and impeller respectively; Small radial clearance between interstage bush and interstage diaphragm bush can reduce leakage. Standard mechanical seal is used for shaft seal.

2. Between bearings type can be classified into two groups: two stage single suction and two stage double suction. They have similar structure to overhung type, but have impellers mounted on the shaft with bearings and two mechanical seals at both ends.

3. The first stage impeller of multistage ring section type is single suction.

（5） The casing consists of suction casing, ring sections, discharge casing and diffusers, which are combined together by super bolts, and have to bear the maximum operating pressure and any heat load caused by temperature of medium.

（6） The rotor includes impellers, shaft, shaft sleeve and balancing disc, which balances the axial thrust.

（7） Oil lubricated roller bearings with water cooling are used.

（8） Exchangeable seal rings are mounted among suction casing, ring section and impellers. Small radial clearance between diffuser bush and impeller wear ring can reduce leakage. Standard mechanical seals are used for shaft seal.

4. Pump is generally driven by explosion proof motor with space coupling. The rotation direction is counter clockwise （Clockwise for BY300-150×2）viewed from shaft end. Materials of wet parts in Material List （on page 21）can be referred to for selection. Both suction and discharge nozzles are upward.

5. Mechanical seals

In general, 103 type (single face unbalanced) and 109 type (single face balanced) of mechanical are used with material selection based on the medium type. If you have special requirements please contact us. For detail refer to Operating Instructions of Mechanical Seal.

三、使 用 说 明

（一） 冷却和密封系统

1、 为使泵能正常工作，对密封腔、轴承（或托架）和泵支架必须根据工作条件进行不同程度的冷却和注入密封油，其具体情况如下表所示：

输送介质温 度 ℃	冷却水管联接方式	冷却部位	备　注
0～80	串　联（压盖并联）	密封腔冷却室	如果输送介质是清洁的油品，可直接将泵内液体引至密封腔当密封液用。
80～200	串　联（压盖并联）	密封腔和轴承冷 却 室	向密封腔供常温中性密封油
200～260	并　联（压盖并联）	密封腔轴承和泵支架冷却室	向密封腔供常温中性密封油
>260	并 串 联（压盖并联）	密封腔轴承和泵支架冷却室	向密封腔供常温中性密封油

2、 冷却水及密封油压力

（1）冷却水压力以 0.15～0.29 兆帕为宜。

（2）密封油压力，原则上应比所在侧密封腔前的压力高 0.05～0.15 兆帕。以防止泵内的介质泄出。

3、 冷却水和密封油的需要量：

（1）串联时每一轴承密封腔和泵支架冷却室（包括压盖在内）的冷却水的需要量 0.3～0.7 米^3/时。

（2）每一密封腔的封油需要量为 0.2～0.5 米^3/时。

（二）安装说明：

1、泵安装的好坏，对泵的平稳运动和使用寿命有很重要的影响，所以安装校正工作必须仔细地进行，不得草率行事。

2、泵吸入管的安装高度，长度和管径应满足计算值，力求简短，减少不必要的损失（如弯头等）；并保证泵在工作时，不超过其允许承受管路的负荷。

3、吸入和排出管路应该有支架。泵不允许承受管路的负荷。

4、安装泵的地点应足够宽畅，以方便检修工作。

5、安装顺序：

（1）将机组放在埋有地脚螺栓的基础上，在底座与基础之间，用成对的楔垫作校正用。

（2）松开联轴器，用水平仪分别放在泵轴和底座上，通过调整楔垫，校正机组水平；适当拧紧地脚螺栓，以防止走动。

（3）用混凝土灌注底座和地脚螺栓孔。

（4）待混凝土干固后，检查底座和地脚螺栓有无走动现象。认为可以后，拧紧地脚螺栓；并重新检查泵轴的水平度。

（5）校正泵轴和电机轴的同心度，在联轴器外圆上，允许偏差 0.1 毫米；两轴器平面的间隙应保证 2～4 毫米，（小泵取小值）间隙要均匀，允差 0.3 毫米。

三. Operating Instructions

(一) Cooling and Flushing

1.In order to keep pump running properly, stuffing box chamber, bearing bracket and pedestal should be cooled to some extent depending on the operating condition, and the seal must be flushed with sealing oil. Refer to the following table for detail.

Temperature of medium ℃	Cooling mode	Parts to be cooled	Remarks/Flushing
0--80	Series (parallel for glands)	Stuffing box chamber	API Plan 11 if clean oil is pumped
80--200	Series (parallel for glands)	Stuffing box chamber and bearing housing	External sealing oil is used to flush the seal
200--260	Parallel	Stuffing box chamber, bearing housing and pedestals	External sealing oil is used to flush the seal
>260	Series/ Parallel (parallel for glands)	Stuffing box chamber, bearing housing and pedestals	External sealing oil is used to flush the seal

2. Pressure requirement for cooling water and sealing oil

(1) 0.15—0.29 MPa for cooling water

(2) 0.05--0.15 MPa higher than that in sealing chamber for sealing oil

3.Quantity requirement for cooling water and sealing oil

(1) 0.3—0.7 m3 / h for cooling water for series connecting.

(2) 0.2-0.5 m3 / h for sealing oil for every seal.

(二) Installation

1. Attention should be paid to the installation of pump because it has an important effect on its life.

2. The suction pipe should be arranged properly to reduce to most extent the suction losses and to ensure sufficient NPSH margin.

3. Pump should not be used to bear the weight of suction/discharge pipes.

4. Enough space for maintenance should be remained around the pump.

5. Installation Procedure

a) Put the pump unit on the foundation with anchor bolts. Then place some pairs of shims between the foundation and the base plate for adjustment.

b) Loose the coupling, verify the horizontation of the pump unit with level gage through adjusting the shims and then tighten the anchor bolts properly.

c) Grout the base plate and anchor bolts holes.

d) Check the base plate and anchor bolts after the cement is dry. Tighten the anchor bolts and recheck the level of shaft.

e) Rectify the alignment of pump shaft and motor shaft, for which the permissible tolerance is 0.1 mm at the circumference of couplings. The axial clearance between the

（6）在接好管路及确定原动机转动方向以后，再接上联轴器，并再校核一遍轴的同心度。

（7）在机组实际试运行 2～3 小时后，作最后检查，如无不良现象，则认为安装合格。在试运行过程中检查轴承的温度和振动情况如下：

温　度　标　准

轴承种类	滑动轴承（巴氏合金瓦）	滚动轴承
温　度	<60℃>	<65℃

允许的振动烈度极限

转速 n	振动的最大烈度极限 mm/s 轴中心线高度	
	≤225mm	>225mm
3000r/min	4.5	7.1

本表根据 ISO2372

6、在安装过程中，为防止杂物落入机器内，机组的所有孔眼均应盖好。

7、为防止管线中杂物进入泵内，对新安装的管线，在泵前应装设过滤器，其有效截面应大于吸入管截面的 2～3 倍。

（三）使用维护须知：

1. 开车准备：

(1) 开车前要拿掉放在机器上的杂物，并把现场清理干净。

(2) 注入适量润滑油。

(3) 未接联轴器前，检查原动机的转向，看是否与泵旋转方向一致，验证后，接好联轴器。

(4) 在未装联轴器前，用手搬动泵轴，应轴动灵活。

(5) 开车前，应该用所输送的液体将泵灌满，以驱除泵中的空气，此时排出管的闸阀应关闭。

(6) 输送热油时，在开车前要将泵均匀预热，预热是利用被输送的热油不断通过泵体进行的。其泵壳温度不得低于入口油温 40℃。其预热速度为 50℃/时。多级节段式泵开始预热前，应将压出段、泵支架、二侧螺母适量松开，预热后再拧紧。

(7) 开车前应检查基础螺栓有无松动，润滑油、封油和冷水的供应情况。

2. 开车：

(1) 彻底检查各项准备工作是否已经完善。

(2) 打开各种仪表的开关，关闭压力表旋塞。

(3) 接通电源（或启动电机），当泵达到正常转速，且仪表指出相应压力后，逐渐打开排出管路上的闸阀，并调节到需要的工况。在排出管路关闭的情况下，泵连续工作的时间，不能超出 3 分钟。

(4) 开车过程中，要时时注意原动机的功率读数和泵的振动情况，振动数不应超过 0.11 毫米。

3. 维护：

(1) 经常检查轴承发热情况，轴承温度不应超过温度标准表中数值，并随时检查油杯和油位情况，定期更换润滑油。

(2) 不要用吸入阀来调节流量，避免产生汽蚀。

(3) 泵不宜在低于设计流量 30%的情况下连续运转，如果必须在该条件下连续运转，则应在出口处安装旁通管，将多余流量接入泵进口管路。

two half couplings should be 2-4 mm, for which the permissible tolerance is 0.3 mm.

f) After pipes are connected and the rotation of motor is right, connect the couplings and check the alignment of two shafts again.

g) After operation for 2-3 hours recheck once more. The temperature and vibration limits at bearings are as follows.

Temperature Limits

Bearing type	Sliding bearing（Babbit）	Roller bearing
Temperature	<60℃	<65℃

Vibration Limits to ISO2372

Speed n	Vibration Limits mm/s Height of Shaft Center Line	
	<=225mm	>225mm
3000 rpm	4.5	7.1

6. All openings should be covered properly to prevent foreign substance from going into pump during installation.

7. A filter with an effective area of 2—3 times more than the suction area should be in front of pump to prevent remains in the piping from going into pump.

（三）Operation and Maintenance

1. Before Start-up

a) Remove sundry goods from the pump unit and make the site clear.

b) Add some lubricating oil.

c) Check the rotation of motor before connecting the couplings.

d) Turn the pump shaft with hands to make sure that it turns freely before connecting the couplings.

e) Fill up pump with pump medium with discharge valve closed before start-up.

f) Pre-heat the pump to the temperature within 40℃ lower than that of pump medium. The rate of preheating should be about 50℃ / hour. Loosen properly the super bolts and tightening the bolts on pedestals before preheating. Re-tighten them when preheating is finished.

g) Check anchor bolts and supply of lubricating oil, flushing oil and cooling water.

2. Start-up

(1) Check thoroughly all the preparatory work.

(2) Open all cocks of instruments but close the discharge pressure gauge.

(3) Connect the power. Open discharge valve gradually when the instruments show expectedconditions at rated speed. The operation with discharge valve closed should last less than 3 minutes.

(4) Attention should be paid to the motor power and vibration of pump（no more than 0.06mm）.

3. Maintenance

(1) Check the temperature of bearings （refer to temperature limits in Installation Procedure）

(2) Never change capacity with suction valve or cavitations may arise.

(3) Pump should not be in continuous operation with capacity less than 30% of design capacity. Bypass should be used in this condition to through the pump.

(4) 经常注意密封的泄漏和发热情况。

(5) 经常检查地脚螺栓的松动情况，泵体温度与入口温度是否一致，出口压力表的波动情况和泵的振动情况。

(6) 注意泵运转有无杂音，如发现异常状态时，及时通知有关人员处理。

4. 停车：

(1) 逐渐关闭排出管路闸阀。

(2) 切断电源（或停止汽机）。

(3) 待泵冷却后，再关闭各冷却系统及封油的管路。

(4) 将泵内液体和冷却水放空，清洗。防止冻裂和粘结。

5. 拆卸：

A. 悬臂式拆卸顺序：

(1) 拆卸时先关闭管路中的闸门，拆掉泵上冷却管路，拆除中间联轴器及泵联轴器。

(2) 拧下泵盖与泵体、托架与托架支架联接螺栓上的螺母，将转子部件和泵盖及托架部件一起由水平方向从泵体中吊出。

(3) 拧下叶轮螺母，然后拆下叶轮，取出键（两级悬臂式需同时拆下级间隔板）。

(4) 拧下泵盖与托架、密封压盖处联接螺栓上的螺母，把泵盖卸下，然后依次拆下密封零件。

(5) 在托架处取下二边的防尘盘和轴承的前后两侧盖，使泵轴和托架部分分开，然后拆出托架内的轴承。

B. 两端支承式拆卸顺序：

(1) 拆卸时先关闭管路中的闸门，卸掉泵上冷却管路，拆除中间联轴器及泵联轴器，起出键。

(2) 拧下轴承端盖处的螺母和防尘盘上的螺钉。

(3) 松开轴承体与平衡室盖的联接螺栓的螺母，从泵轴上卸下轴承体。

(4) 松开轴承上的圆螺母，依次卸下档套，滚动轴承，轴承端盖，止推调正套和除尘盘。

(5) 用同样的方法卸下另一端轴承部件。

(6) 拧下密封处圆螺母，取出密封。

(7) 拧下泵体与泵盖的联接螺母，从水平方向拆下泵盖。

(8) 拆下轴套、挡套和第二级叶轮。

(9) 拆除联接止动板和隔板的螺栓，取下止动板和隔板。

(10) 将泵轴和第一级叶轮，从水平方向取出，拆下第一级叶轮。

C. 节段式拆卸顺序：

(1)～(6) 与上述两端支承式拆卸顺序相同。

(7) 拧下平衡室盖与压出段联接螺栓上的螺母，取下平衡室盖，平衡盘和平衡板。

(8) 拧下穿杠螺母，吊走压出段。

(9) 起出平衡盘与轴联接的键，并依次拆下末级导叶，末级叶轮和中段，起出键，同样依次拆至首级叶轮。

(10) 卸下穿杠螺栓，把吸入段与泵轴同首级叶轮分开。

6. 装配：

(1) 按上述拆卸顺序相反进行。

(4) Check the leakage and temperature of seal.

(5) Regularly check anchor bolts, temperature, pressure and vibration.

(6) Noise should be often checked too. If abnormal condition arises, inform relative personnel for solution.

4. Stopping

(1) Close discharge valve gradually.

(2) Switch off the power.

(3) Close cooling and flushing system only after the pump becomes cool.

(4) Drain the pump medium and cooling water.

5. Disassemble

A. For overhung type

(1) Close suction and discharge valves. Remove cooling pipeline, spacer and pump coupling half.

(2) Unscrew the nuts connecting pump casing/casing cover and bearing bracket/bracket support, then pull out the rotor with casing cover and bearing bracket.

(3) Unscrew impeller nut, remove impeller and its key（and interstage diaphragm for two stage overhung type）.

(4) Unscrew the nuts connecting casing cover / bracket and casing cover/gland, then remove casing cover and parts of seal successively.

(5) Remove thrower（s）and bearing covers to make pump shaft and bearing bracket apart. Then dismantle the bearing.

B. For between bearings type

(2) Close suction and discharge valves. Remove cooling pipeline, spacer and pump coupling half.

(3) Unscrew bolts on bearing covers and throwers.

(4) Unscrew nuts connecting bearing bracket / balancing chamber cover to dismantle the bearing bracket from pump shaft.

(5) Unscrew bearing nuts, remove successively adapter, rolling bearings, bearing cover, disc and thrower.

(5) Dismantle the bearing bracket at NDE in same way.

(6) Unscrew the nuts to remove the seal.

(7) Unscrew nuts connecting pump casing / casing cover to remove the casing cover.

(8) Dismantle shaft sleeve, adapter and second stage impeller.

(9) Unscrew the nuts to make apart interstage diaphragm and lockplate.

(10) Pull out pump shaft with the first stage impeller. Then remove the impeller.

C. For multistage ring section type

(1)-(6) Same as that for between bearings type.

(7) Unscrew nuts connecting balancing chamber cover and discharge casing to remove balancing chamber cover, balancing disc and balancing plate.

(8) Unscrew super bolts to dismantle discharge casing.

(9) Remove the key for balancing disc. Then dismantle successively the last diffuser, the last impeller, ring section and the key as well until the first impeller.

(10) Remove the super bolts to make apart suction casing and shaft with the first impeller.

6. Assemble

(1) Just the reverse procedure of disassemble.

四、故障原因及其消除方法

可能发生的原因	故障现象							消除方法
泵内或吸入管内留有空气	①	②		④				重新灌泵，驱除空气
吸上扬程过高或灌注高不够	①	②		④				降低标高减少吸入管阻力，增大进口压力
吸入管中压力小于或近于汽化压力	①	②		④		⑥		提高压力
管路漏气	①	②						检查并拧紧
转速高或过低	①	②	③					按说明书规定
转向不对	①	②						调整转向
总扬程和与泵的扬程不符	①	②	③					设法降低排出系统的阻力
介质重量与粘度不符原设计	①	②	③					应进行换算
在流量极小处运转产生振动				④		⑥	⑦	加大流量或安装旁通循环管
泵轴与原动机轴线不一致，轴弯曲			③	④	⑤	⑥	⑦	校正之
转动部分与固定部分发生碰擦			③	④		⑥		校正轴线
轴承损坏				④				更换之
转动部分不平衡引起振动				④	⑤	⑥	⑦	作检查并消除之
轴承盒内因油过多或太脏			③	④			⑦	按油位计规定添油、更换油
轴承或密封环磨损过多形成转子偏心				④	⑤	⑥	⑦	更换之并校正轴线
泵内或管路内有杂物堵塞	①	②		④				检查并清理
机械密封损坏					⑤			更换之
密封环磨损过多		②	③					更换之
密封或机械密封安装不当					⑤	⑥		检查并消除之
密封液压力不当					⑤	⑥		应按密封腔前的压力，加大 0.05~0.15 兆帕

①表示：泵不输出液体。

②表示：流量扬程不够。

③表示：消耗功率过大。

④表示：泵发生振动及噪音。

⑤表示：密封处泄漏过多。

⑥表示：泵过份发热及转不动。

⑦表示：轴承发热及轴承磨损。

注：当故障有多种原因时，应逐项消除或根据其现象作出判断，进行消除。

四、Trouble Shooting

Cause	Phenomenon							Remedy
Pump or piping is not completely vented or primed	①	②		④				Vent and / or prime.
Suction lift is too high or flood head is not enough.	①	②		④				Check / alter liquid level. Reduce friction losses in suction line. Increase suction pressure.
Pressure in suction is lower than or near to its vapor pressure.	①	②		④		⑥		Increase suction pressure.
Air intake in suction pipe	①	②						Check and tighten the connection.
Speed is too high or too low.	①	②	③					Correct the speed.
Reverse direction of rotation.	①	②						Correct the direction of rotation.
Insufficient head.	①	②	③					Reduce the resistance in the discharge system.
Specific gravity is higher than specified in the purchase order.	①	②	③					Calculation again.
Vibration at very low capacity.				④		⑥	⑦	Increase capacity or equip a bypass.
Non- alignment between two shafts.			③	④	⑤	⑥	⑦	Re-align.
Touch between rotating and stationary parts.			③	④		⑥		Rectify the shaft centerline.
Bearing damaged.				④				Change the bearings.
Vibration from rotor's unbalance.				④	⑤	⑥	⑦	Check and rectify.
Lubricating oil too much or too dirty.			③	④			⑦	Fill in and change oil to Requirements.
Wear ring or bearings worn.				④	⑤	⑥	⑦	Change and re-align.
Suction pipe or impeller clogged.	①	②		④				Check and remove.
Mechanical seal damaged.					⑤			Change mechanical seal.
Wear ring worn too much.		②	③					Change wear ring
Shaft seal installed improperly.					⑤	⑥		Check and rectify.
Flushing pressure too low.					⑤	⑥		Increase the pressure to 0.05—0.15Mpa more than in the chamber.

① Pump delivers no liquid.

② Capacity and / or head insufficient.

③ Excessive shaft power.

④ Vibration and / or noise.

⑤Excessive eakage from shaft seal.

⑥ Over heating and / or pump shaft doesn't turn.

⑦Excessive earing temperature and / or bearing damage.

Remarks: When there are a few causes for one trouble, remedies can be carried out one by one.

五、Y型单级悬臂式油泵工作性能表

Performance Table for Single Stage Overhung Type

泵型号 Size	流量 Capacity Q 米³/时 M³/h	流量 Capacity Q 升/秒 L/s	扬程 米 H m	转速 Speed 转/分 rpm	效率 η %	功率 Power N(千瓦) 轴功率 Shaft Power	功率 Power N(千瓦) 电机功率 Motor Rated	必需汽蚀余量 NPSHr 米 m	叶轮参考直径 mp. Dia. D_2 毫米 mm	泵壳许用压力 P(兆帕) Perm. Press. 铸铁 CI	泵壳许用压力 P(兆帕) Perm. Press. 铸钢 CS	泵重量 Weights (千克) kg
50Y—60	12.5	3.47	60	2950	36	5.7		2.3	218	1.57	2.55	145
50Y—60A	11.2	3.1	49		35	4.3			202			
50Y—60B	9.9	2.75	38		34	3			184			
65Y—60	25	6.95	60	2950	50	8.2		2.6	230	1.57	2.55	155
65Y—60A	22.5	6.25	49		49	6.13			208			
65Y—60B	19.8	5.5	38		48	4.27			184			
65Y—100	25	6.95	100	2950	40	17		2.5	290	1.57	2.55	185
65Y—100A	23	6.4	85		39	13.7			268			
65Y—100B	21	5.84	70		38	10.5			245			
80Y—60	50	13.9	60	2950	60	13.6		3	225	1.57	2.55	170
80Y—60A	45	12.5	49		59	10.2			207			
80Y—60B	39.5	11	38		58	7.1			186			
80Y—100	50	13.9	100	2950	52	26.2		3	280	1.96	3.14	230
80Y—100A	45	12.5	85		51	20.4			267			
80Y—100B	39.5	11	70		50	15.1			252			
100Y—60	100	27.8	60	2950	70	24.2		4	230	1.57	2.55	154
100Y—60A	90	25	49		67	17.9			208			
100Y—60B	79	21.9	38		65	12.6			184			
100Y—120	100	27.8	120	2950	62	52.8		4.5	310	2.16	3.14	270
100Y—120A	93	25.8	105		62	42.8			290			
100Y—120B	86	23.9	90		61	34.6			270			
100Y—120C	79	21.9	75		60	26.8			245			
150Y—150	200	55.6	150	2950	65	126		4.5	360	2.45	3.43	580
150Y—150A	186	51.6	130		65	101			335			
150Y—150B	170	47.2	110		64	80			310			
150Y—150C	155	43	90		64	59.5			280			
200Y—75	280	78	75	2950	75	76.5		5.5	265	1.77	2.57	410
200Y—75A	270	75	60		74	59.6			243			
200Y—75B	245	68	45		73	41.1			220			

六、型结构图

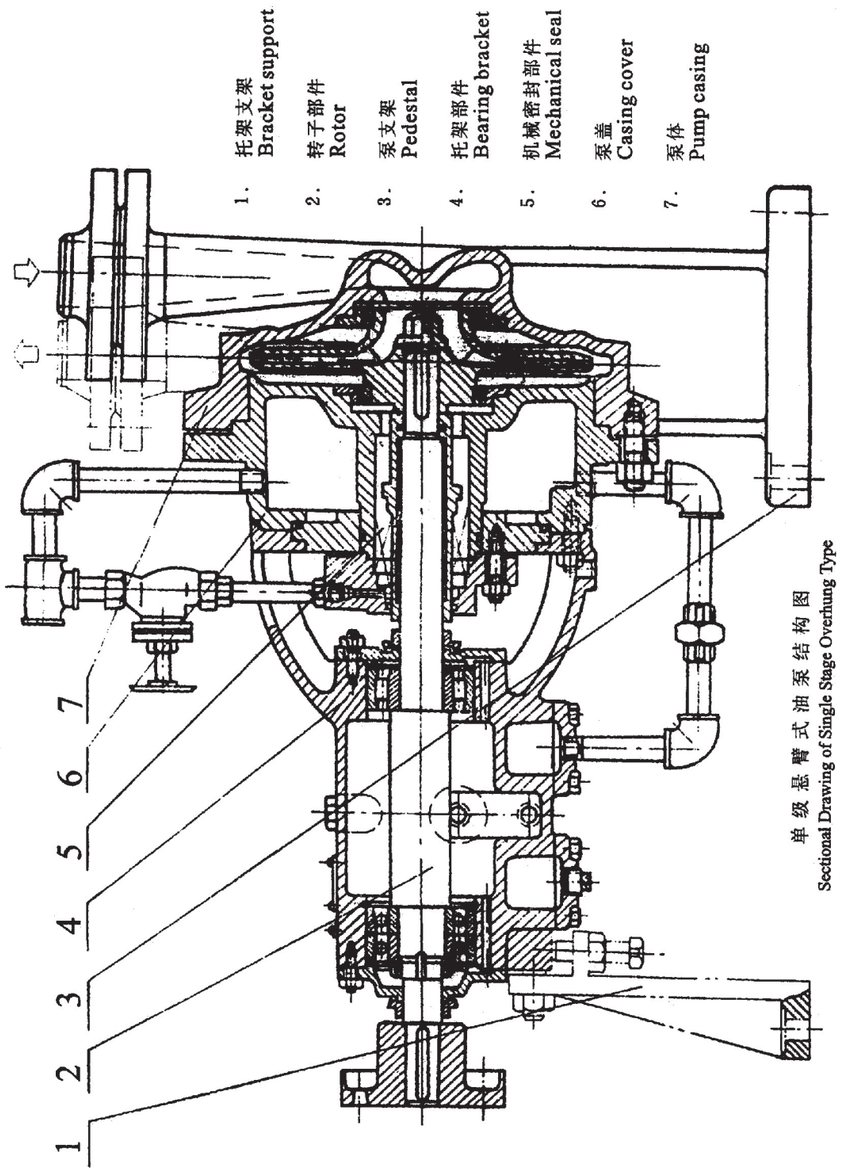

单级悬臂式油泵结构图
Sectional Drawing of Single Stage Overhung Type

七、Y型油泵主要零件材料表

零件名称	温度范围（℃）		
	—20～200	—45～400	
	I	II	III
	不耐硫腐蚀	不耐硫腐蚀	耐硫腐蚀
泵盖 泵体	HT25—47	ZG25	ZGCr5MO
叶轮	HT20—40	ZG25	ZG1Cr13
轴	45	35CrMO	3Cr13
密封 轴套	25号钢	25号钢	3Cr13
泵体 密封环	40Cr	40Cr	3Cr13
叶轮 密封环	HT25—47	45	45
泵体 螺栓	A3	45或 35CrMO	45或 35CrMO
平衡盘	1Cr13堆焊 硬质合金	1Cr13堆焊 硬质合金	1Cr13堆焊硬质合金
平衡板	HT20—40	40Cr	2Cr13

七. Materials of Main Parts

Part Name	Temperature (℃)		
	-20~200	-45~450	
	I	II	III
	Liable to Sulphur corrosion	Liable to Sulphur corrosion	Anti- Sulphur corrosion
Pump Casing and Casing Cover	HT250	ZG230-450	ZGCr5Mo
Impeller	HT200	ZG230-450	ZG1Cr13
Shaft	45	35CrMo	3Cr13
Shaft Sleeve	25	25	3Cr13
Casing Wear	40Cr	40Cr	3Cr13
Impeller Wear	HT250	45	45
Casing Bolts	Q235AQ	45/35CrMo	45/35CrMo
Balancing Disc	1Cr13 plate	1Cr13 plate	1Cr13 plate
Balancing Plate	HT200	40Cr	2Cr13

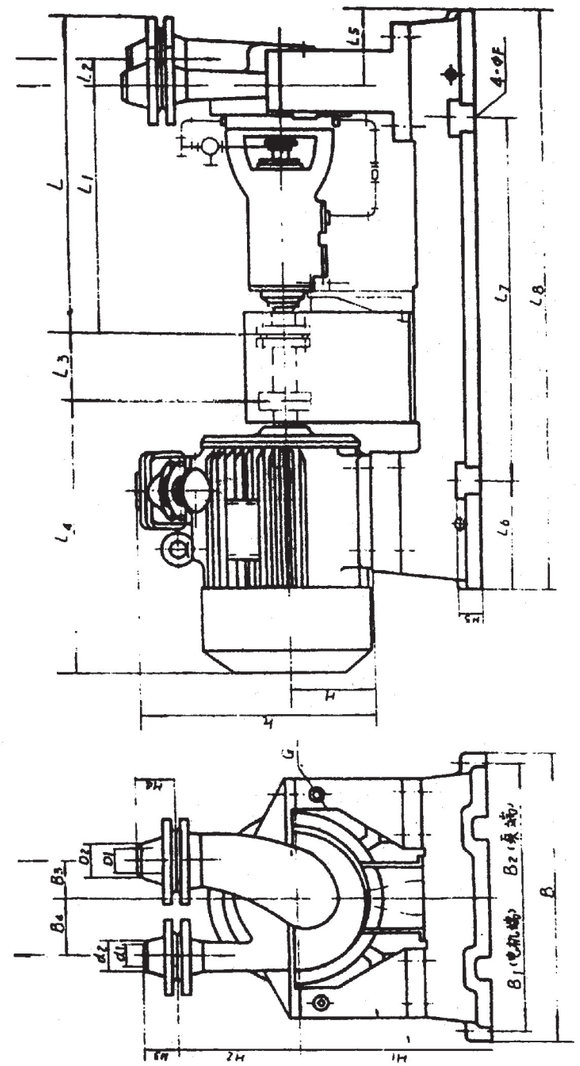

Y型单级悬臂式油泵外形及安装尺寸图
Dimensions for Single Stage Overhung Type

Y 型单级悬臂式油泵外形及安装尺寸表
Dimensions for Single Stage Overhung Type

单位 Unit：mm

泵型号 Pump Size	电机 Motor 型号 Size	功率 Rated Power(kW)	L	L_1	L_2	L_3	L_4	L_5	L_6	L_7	L_8	B	B_1	B_2	B_3	B_4	h	H	H_1	H_2	H_3	H_4	H_5	D_1	D_2	d_1	d_2	G	4～ØF
50Y-60	BJO_2 41－2	5.5	695	555	60	177	503	170	350	860	1535	710	650	650	75	125	375	132	410	220	48	48	50	49	58	38	46	3/8	23
	BJO_2 42－2	7.5					533										375	132											
	BJO_2 51－2	10					573										440	160											
	BJO_2 52－2	13					603										440	160											
	1JB 12－2	11					733										530	170											
	1JB 21－2	15					748										560	212											
	$YB132S_1$－2	5.5					513										470	132											
	$YB132S_2$－2	7.5					513										470	132											
	$YB160M_1$－2	11					658										530	160											
	$YB160M_2$－2	15					258										530	160											
65Y-60	BJO_2 41－2	5.5	700	555	55	177	503	170	350	860	1535	710	650	650	70	130	375	132	410	250	48	52	50	66	74	49	58	3/8	23
	BJO_2 42－2	7.5					533										375	132											
	BJO_2 51－2	10					573										440	160											
	BJO_2 52－2	13					603										440	160											
	BJO_2 61－2	17					723										500	180											
	1JB 12－2	11					733										530	170											
	1JB 21－2	15					748										560	212											

上海水泵制造有限公司
SHANGHAI PUMP MANUFACTURE CO., LTD.
Y型

Y 型单级悬臂式油泵外形及安装尺寸表
Dimensions for Single Stage Overhung Type

单位 Unit：mm

泵型号 Pump Size	电机 Motor 型号 Size	功率 Rated Power(kW)	L	L_1	L_2	L_3	L_4	L_5	L_6	L_7	L_8	B	B_1	B_2	B_3	B_4	h	H	H_1	H_2	H_3	H_4	H_5	D_1	D_2	d_1	d_2	G	4～ØF
65Y-60	1JB 22－2	20	700	555	55	177	813	170	350	860	1535	710	650	650	70	130	560	212	410	250	48	52	50	66	74	49	58	3/8	23
	$YB132S_1$－2	5.5					513										470	132											
	$YB132S_2$－2	7.5					513										470	132											
	$YB160M_1$－2	11					658										530	160											
	$YB160M_2$－2	15					658										530	160											
	YB160L－2	18.5					698										530	160											
	YB180M－2	22					733										565	180											
65Y-100	BJO_2 52－2	13	705	555	60	177	603	170	350	860	1535	710	650	650	80	160	440	160	410	280	48	52	50	66	74	49	58	3/8	23
	BJO_2 71－2	22					753										570	225											
	BJO_2 72－2	30					803										570	225											
	1JB 12－2	11					733										530	170											
	1JB 21－2	15					748										560	212											
	1JB 22－2	20					813										560	212											
	1JB 32－2	32					953	235	400	960	1740	790	730	730			660	250											
	$YB160M_1$－2	11					658	170	350	860	1535	710	650	650			530	160											
	$YB160M_2$－2	15					658										530	160											
	YB160L－2	18.5					698										530	160											

Y 型单级悬臂式油泵外形及安装尺寸表
Dimensions for Single Stage Overhung Type

单位 Unit：mm

泵型号 Pump Size	电机 Motor 型号 Size	功率 Rated Power(kW)	L	L_1	L_2	L_3	L_4	L_5	L_6	L_7	L_8	B	B_1	B_2	B_3	B_4	h	H	H_1	H_2	H_3	H_4	H_5	D_1	D_2	d_1	d_2	G	4～ØF
65Y-100	YB220L_1-2	30	705	555	60	177	808	170	350	860	1535	710	650	650	80	160	625	200	410	280	48	52	50	66	74	49	58	3/8"	
80Y-60	BJO_2 42－2	7.5	713	555	60	177	533	170	350	860	1535	710	650	650	85	128	375	132	410	250	52	55	50	78	90	66	74	3/8"	23
	BJO_2 51－2	10					573										440	160											
	BJO_2 52－2	13					603										440	160											
	BJO_2 61－2	17					723										500	180											
	1JB 12－2	11					733										530	170											
	1JB 21－2	15					748										560	212											
	1JB 22－2	20					813										560	212											
	YB132S_2－2	7.5					513										470	132											
	YB160M_1－2	11					658										530	160											
	YB160M_2－2	15					658										530	160											
	YB160L－2	18.5					698										530	160											
	YB180M－2	22					733										565	180											
80Y-100	BJO_2 61－2	17	713	555	60	177	723	170	350	860	1535	710	650	650	90	164	500	180	410	280	52	55	50	78	90	66	74	3/8"	23
	BJO_2 71－2	22					753										570	225											
	BJO_2 72－2	30					803	235	400	960	1740	790	730	730			570	225											
	$JB_3$200M－2	40					893	170	350	860	1535	710	650	650			570	200											

Y 型单级悬臂式油泵外形及安装尺寸表
Dimensions for Single Stage Overhung Type

单位 Unit：mm

泵型号 Pump Size	电机 Motor 型号 Size	功率 Rated Power(kW)	L	L_1	L_2	L_3	L_4	L_5	L_6	L_7	L_8	B	B_1	B_2	B_3	B_4	h	H	H_1	H_2	H_3	H_4	H_5	D_1	D_2	d_1	d_2	G	4～ØF
80Y-100	1JB 21－2	15	713	555	60	177	748	170	350	860	1535	710	650	650	90	164	560	212	410	280	52	55	50	78	90	66	74	3/8"	23
	1JB 22－2	20					813										560	212											
	1JB 32－2	32					953	275	400	960	1740	790	730	730			660	250											
	YB160M_2－2	15					958	170	350	860	1535	710	650	650			530	160											
	YB160L－2	18.5					698										530	160											
	YB180M－2	22					733										565	180											
	YB200L_1－2	30					808										625	200											
	YB200L_2－2	37					808										625	200											
100Y-60	BJO_2 71－2	22	772	572	85	177	753	168	350	860	1535	710	650	650	120	150	570	225	410	250	55	62	50	96	110	78	90	3/8"	23
	BJO_2 72－2	30					803										570	225											
	$JB_3$200M－2	40					891										570	200											
	1JB 21－2	15					748										560	212											
	1JB 22－2	20					813										560	212											
	1JB 32－2	32					953	203	400	960	1740	790	730	730			660	250											
	YB160M_2－2	15					658	168	350	860	1535	714	650	650			530	160											
	YB160L－2	18.5					698										530	160											
	YB180M－2	22					733										565	180											

Y 型单级悬臂式油泵外形及安装尺寸表
Dimensions for Single Stage Overhung Type

单位 Unit：mm

泵型号 Pump Size	电机 Motor 型号 Size	功率 Rated Power(kW)	L	L_1	L_2	L_3	L_4	L_5	L_6	L_7	L_8	B	B_1	B_2	B_3	B_4	h	H	H_1	H_2	H_3	H_4	H_5	D_1	D_2	d_1	d_2	G	4～ØF
100Y-60	$YB204L_1$-2	30	772	572	85	177	808	168	350	860	1535	710	650	650	120	150	625	200	410	250	55	62	50	96	110	78	90	3/8"	23
100Y-120	BJO_2 72－2	30	889	670	105	176	804	210	400	960	1740	790	730	730	150	184	570	225	450	320	58	68	50	96	110	78	90	3/8"	23
	BJO_2 82－2	40					964	215	450	1060	1910						630	250											
	BJO_2 91－2	55					1004										750	280											
	$JB_3$200M－2	40					894	210	400	960	1740						570	200											
	$JB_3$225M－2	55					944										660	225											
	$JB_3$250S－2	75					934										720	250											
	$JB_3$280S－2	100					1094	215	450	1060	1910						780	280											
	1JB 32-2	32					954										660	250											
	$YB200L_1$—2	30					809	210	400	960	1740						625	200											
	$YB200L_2$－2	37					809										625	200											
	YB225M－2	45					844										670	225											
	YB250M－2	55					939										770	250											
	YB280S－2	75					1014	215	450	1060	1910						830	280											
	YB280M－2	90					1064										830	280											
150Y-150	BJO_2 92-2	75	1035	780	105	176	1044	240	480	1365	2175	980	750	920	150	240	750	280	530	400	68	72	50	145	160	120	135	1/2"	23
	BJO_2 93-2	100					1144										750	280											

Y 型单级悬臂式油泵外形及安装尺寸表
Dimensions for Single Stage Overhung Type

单位 Unit：mm

泵型号 Pump Size	电机 Motor 型号 Size	功率 Rated Power(kW)	L	L_1	L_2	L_3	L_4	L_5	L_6	L_7	L_8	B	B_1	B_2	B_3	B_4	h	H	H_1	H_2	H_3	H_4	H_5	D_1	D_2	d_1	d_2	G	4～ØF
150Y-150	$JB_3$225M－2	55	1035	780	105	176	944	240	480	1365	2175	980	750	920	150	240	660	255	530	400	68	72	50	145	160	12	135	1/2"	23
	$JB_3$250M－2	75					934										720	250											
	$JB_3$280S－2	100					1094										780	280											
	$JB_3$280M－2	125				196	1144										780	280											
	$JB_3$315S－2	160					1284										800	315											
	$JB_3$315L－2	200					1384										800	315											
	YB250M－2	55					9344										770	250											
	YB280S－2	75				176	1014										830	280											
	YB280M－2	90					1064										830	280											
200Y-75	JP 220M－2	40	963	678	105	176	894	225	450	1030	1930	860	800	800	165	190	570	200	450	360	72	80	50	202	222	146	161	3/8"	23
	$JB_3$225M－2	55					944										660	225											
	$JB_3$250S－2	75					934										720	250											
	$JB_3$280S－2	100					1094										780	280											
	$JB_3$280M－2	125					1144										780	280											
	YB225M－2	45					844										670	225											
	YB250S－2	55					934										770	250											
	YB280S－2	75					1014										830	280											
	YB280M－2	90	963	678	105	176	1064	225	450	1030	1980	860	800	800	165	190	830	280	450	360	72	80	50	202	222	146	161	3/8"	23